HDL643C PARTS LIST

Serial #_____ ID#_____ _____ _____

Gasket Sets and Special Tools

Gasket Set	Buna-N & Iron	794594
	FKM & Iron	794592
	PTFE & Iron	794593
	Neoprene & Iron	794590
	Ethylene Propylene & Iron	794589
Packing Installation Tool		790538
Spanner Wrench, 1/4" Adjustable		790316
Wrench for Valve Holdown Screw		790535
Tool Kit		790199

Bulletins Needed For Complete Parts List

This page	9E-331
Crankcase	9F-031
Oil Pump	9G-011
Flywheel	9H-030
Crosshead	9J-102
Packing	9K-042
Cylinder	9L-170
Head	9M-230
Head with Unloaders	9M-240

Notes:

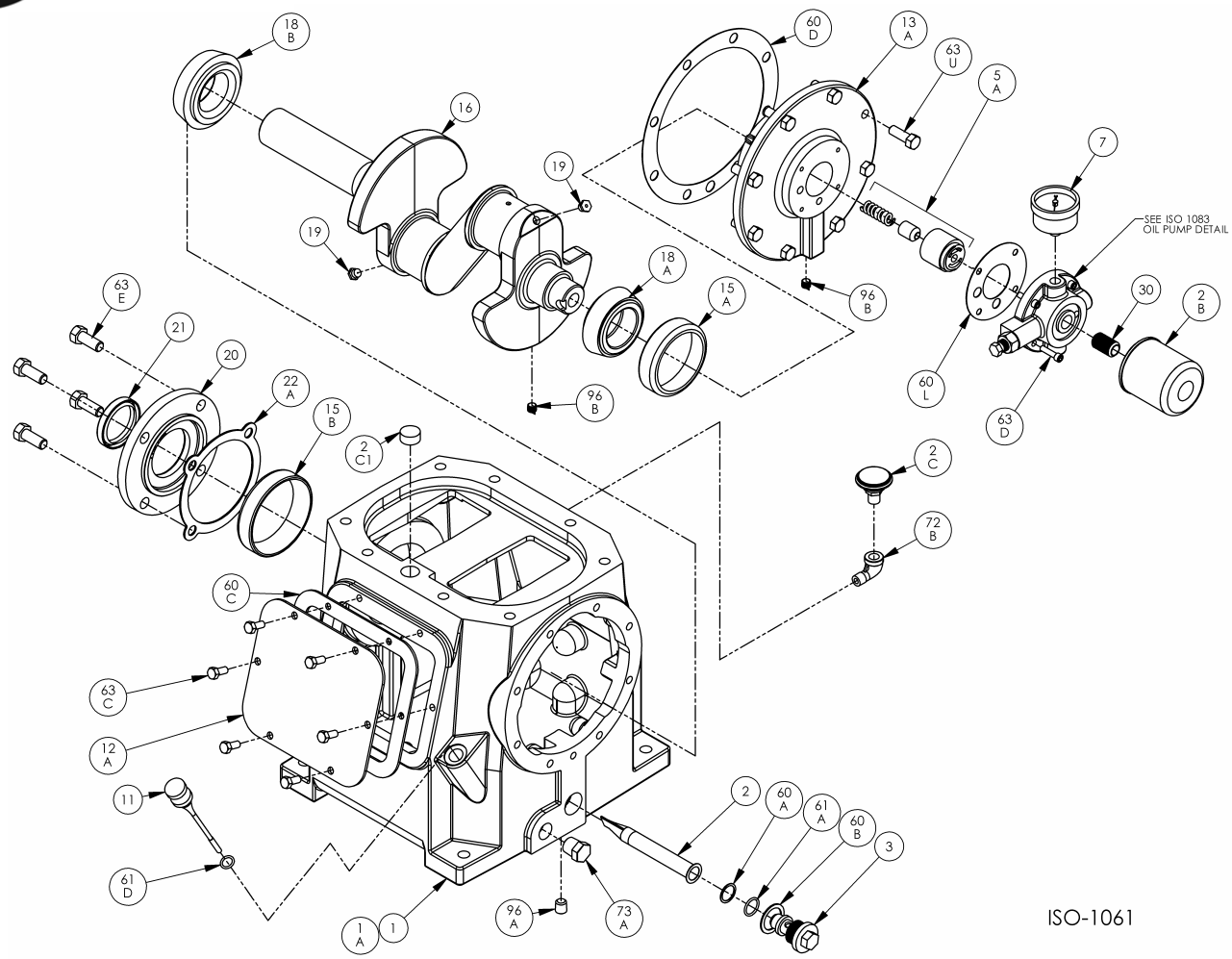

Crankcase Assembly:
Models HD601B, HD602C|B, HD603C|B, HDL602C|B, HDL603C|B, HDL642C|B, HDL643C|B, HDS602C|B
HD612C|B, HD613C|B, HDL612C|B, HDL613C|B, HDS612C|B

ISO1061

Ref	Description	Qty	Part No
1	Crankcase Assembly – with Oil Filter (std.)	1	794758
	Crankcase Assembly – no Oil Filter		794759
1A	Crankcase	1	794709
2	Oil Intake Screen	1	792135
2B	Oil Filter	1	794726
2C	Breather Filter (current)	1	792070
2C1	Breather Filter (Previous Construction)		794752
3	Oil Screen Plug	1	792145
5A	Oil Pump Kit	1	794760
7	Oil Pressure Gauge	1	790012
11	Oil Bayonet Assembly	1	792162
12A	Inspection Plate	1	794140
13A	Bearing Carrier	1	794714
15A	Bearing Cup (Outboard)	1	794131
15B	Bearing Cup (Inboard)	1	794731
16	Crankshaft Assy (w\ 18A,18B,19,96B)	1	794708
18A	Bearing Cone (Outboard)	1	794130
18B	Bearing Cone (Inboard)	1	794730
19	Orifice	2	792146

Ref	Description	Qty	Part No
20	Bearing Cover Plate	1	794716
21	Oil Seal	1	794732
22A	Bearing Adjustment Shim Kit	1	794733
30	Oil Filter Fitting	1	794725
60A	Gasket - Oil Screen *	1	792136
60B	Gasket - Oil Screen Plug *	1	792123
60C	Gasket - Inspection Plate *	1	794122
60D	Gasket - Bearing Carrier Assembly*	1	794720
60L	Gasket - Oil Pump Cover *	1	794721
61A	O-Ring - Oil Screen *	1	792175
61D	O-Ring - Oil Bayonet *	1	792174
63C	Capscrew - Hex Hd	6	793116
63D	Capscrew - Soc Hd	4	790559
63E	Capscrew - Hex Hd	4	790484
63U	Capscrew - Hex Hd	8	792093
72B	Elbow	1	790453
73A	Pipe Plug	1	790024
96A	Pipe Plug	1	790488
96B	Pipe Plug	2	790309

* Included in Gasket Sets

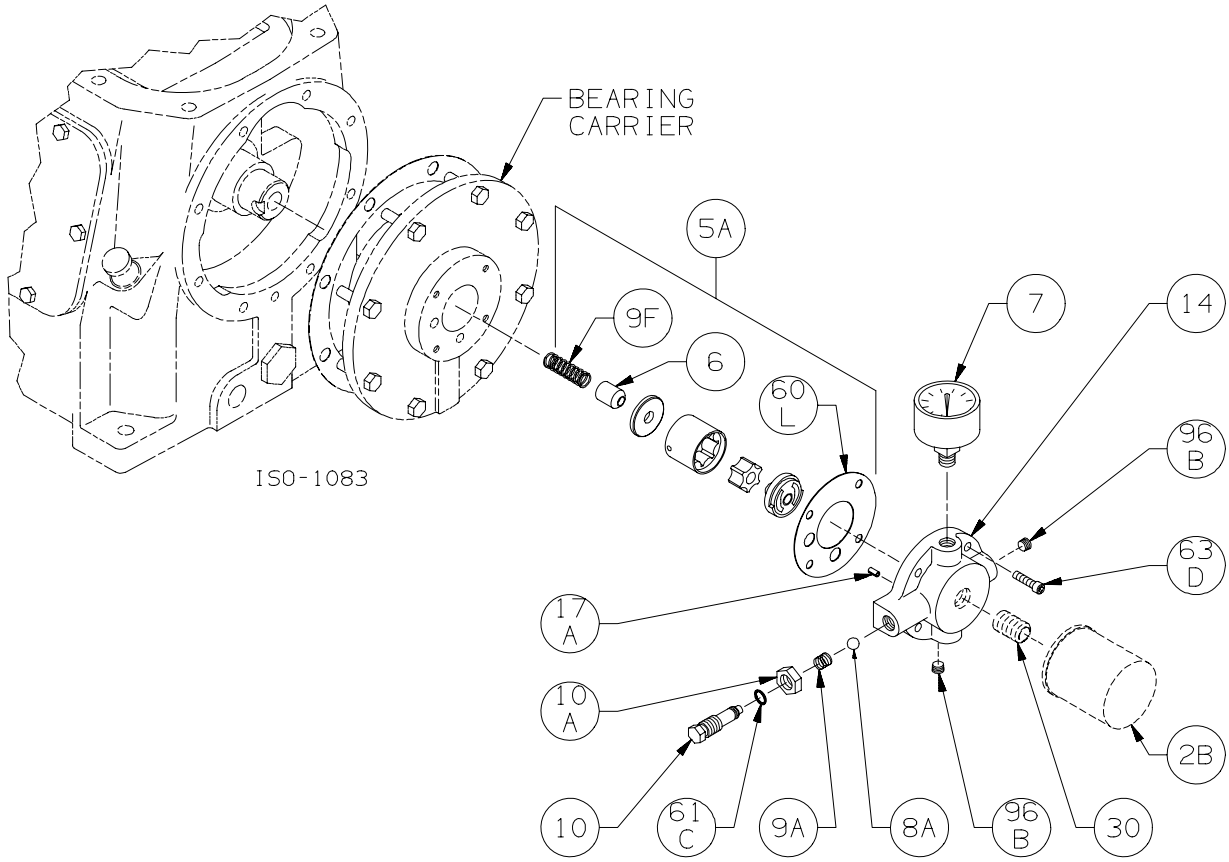

Oil Pump Detail for Models:
HD161C|B, HD162C|B, HD163C, HDS162C
HD172C|B, HD173C, HDL172C, HDL173C, HDS172C,
HDL342C|B, HDL343C|B,
HD361C|B, HD362C|B, HD363|B, HDS362C, HDL362C|B, HDL363C|B,
HD372C|B, HDL372C|B, HD373C, HDL373C|B, HDS372C
HD601B, HD602C|B, HD603C|B, HDL602C|B, HDL603C|B, HDS602C, HDL642C|B, HDL643C|B,
HD612C|B, HDL612C|B, HD613C|B, HDL613C|B, HDS612C|B
HD942B|A and HDL942B|A

ISO1083

Ref	Description	Qty	Part No
2B	Oil Filter	1	794726
5A	Oil Pump Kit (w/ 6, 9F, 60L)		794760
6	Oil Pump Cone	1	794750
7	Oil Pressure Gauge	1	790012
8A	Oil Pressure Adj. Ball	1	792154
9A	Oil Pressure Adj. Spring	1	792153
9F	Oil Pump Spring	1	794751
10	Oil Pressure Adj. Screw	1	792148
10A	Locknut	1	792152

Ref	Description	Qty	Part No
14	Oil Pump Cover Assembly - For Filter with 17A, 96B	1	794764
	Oil Pump Cover Assembly - w\ 17A, 96B		794763
17A	Roll Pin	1	794753
30	Oil Filter Fitting	1	794725
60L	Gasket - Oil Pump Cover *	1	794721
61C	O-Ring - Adjusting Screw *	1	792168
63D	Capscrew - Soc. Hd	4	790559
96B	Pipe Plug	2	790309

* Included in Gasket Sets

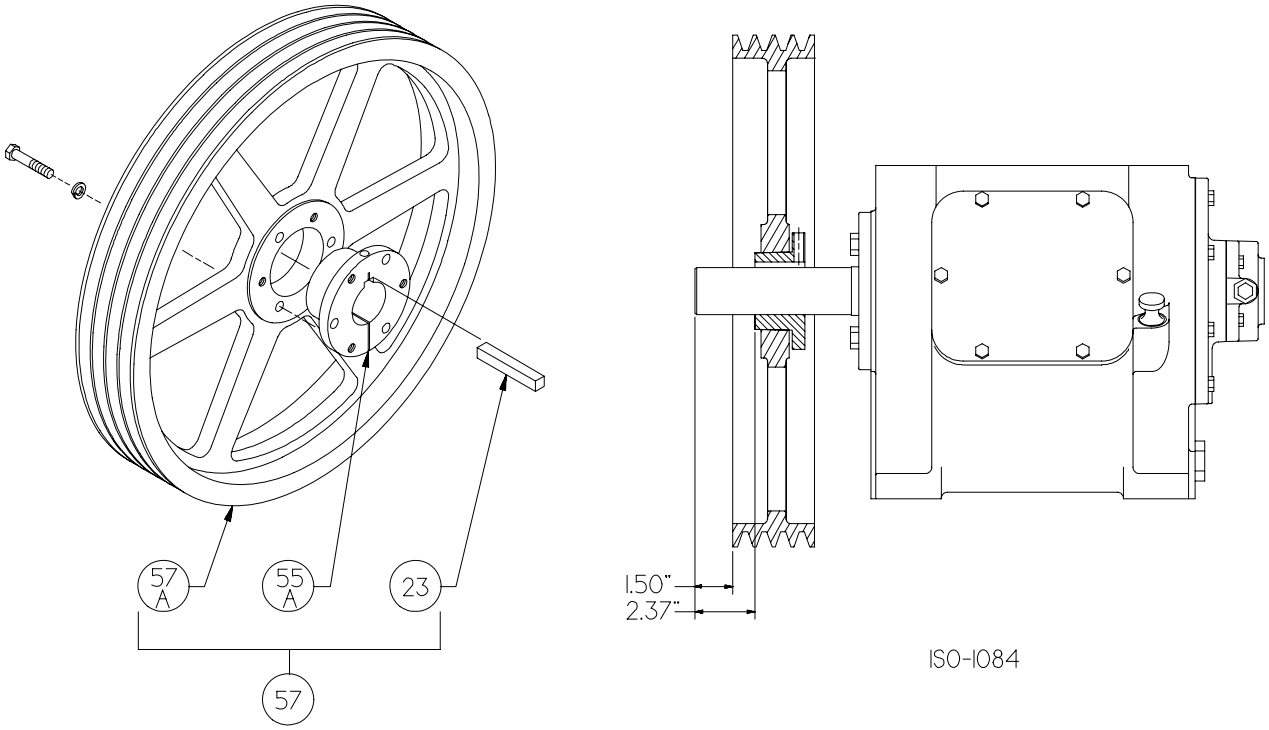

Standard Flywheel Assembly:
HD601B, HD602C|B, HD603C|B
HDL602C|B, HDL603C|B, HDS602C|B
HDL642C|B, HDL643C|B ISO1084

Ref	Description	Qty	Part No
23	Key	1	794267
55A	Hub	1	790149
57	Flywheel Assembly	1	794132
57A	Flywheel	1	790545

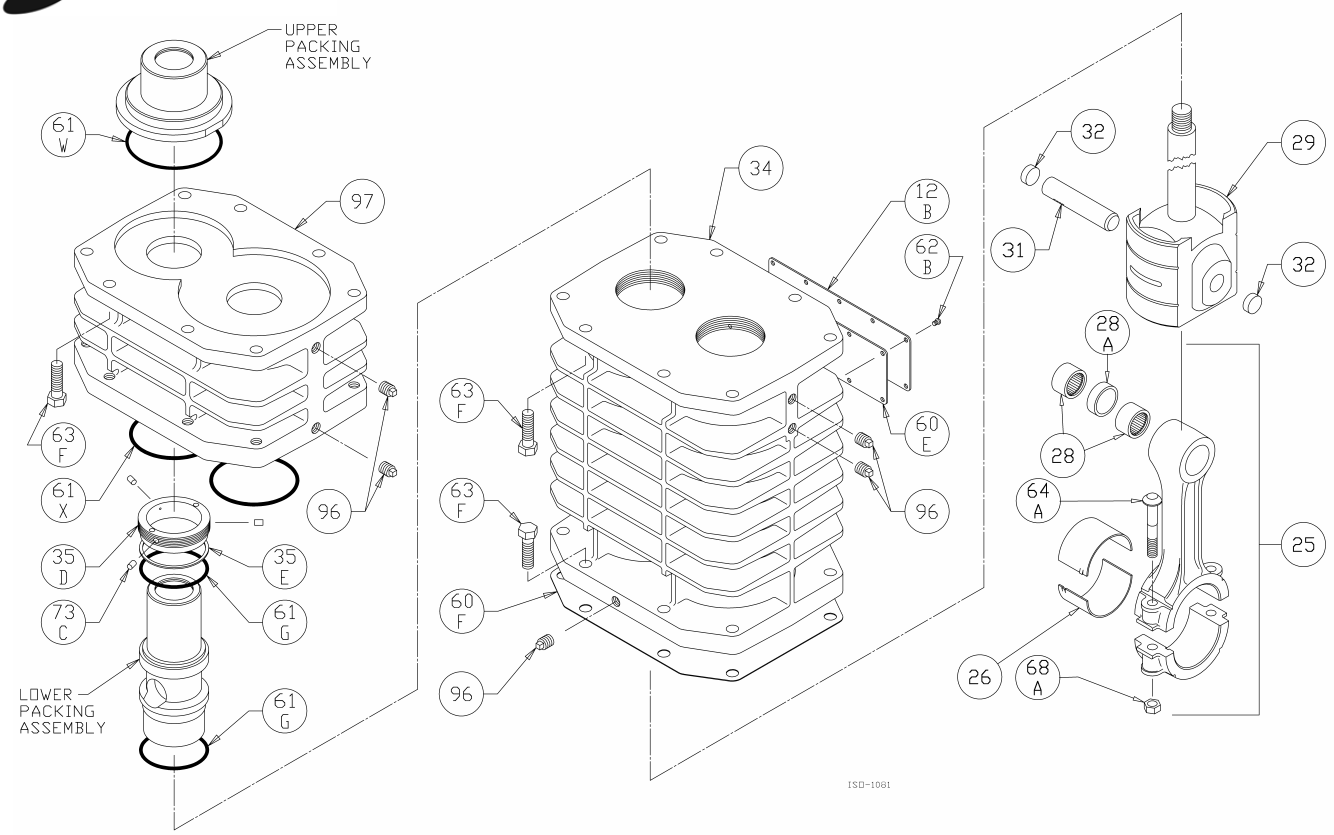

Crosshead Assembly: HD603C, HDL603C, HDL643C

ISO1081

Ref	Description	Qty	Part No
12B	Inspection Plate	1	794093
25	Connecting Rod Assembly	2	794767
26	Connecting Rod Bearing	2	794710
28	Wrist Pin Roller Bearing	4	794776
28A	Bearing Spacer	2	794770
29	Crosshead Assembly	2	794435
31	Wrist Pin	2	794727
32	Wrist Pin Plug	4	794724
34	Crosshead Guide	1	794430
35D	Hold-down Ring	2	794220
35E	Spacer Ring	2	794403
60E	Gasket - Inspection Plate *	1	794092
60F	Gasket - Crankcase *	1	794121
61G	O-Ring (Buna-N) *	4	794082
	O-Ring (FKM) *		794213
	O-Ring (PTFE) *		794208
	O-Ring (Neoprene) *		794090
	O-Ring (Ethylene Propylene) *		794206
61W	HD603C, HDL603C only		
	O-Ring (Buna-N) *	2	793177
	O-Ring (FKM) *		793212
	O-Ring (PTFE) *		793210
	O-Ring (Neoprene) *		793216
	O-Ring (Ethylene Propylene) *		793206

Ref	Description	Qty	Part No
61W	HDL643C only		
	O-Ring (Buna-N) *	2	794082
	O-Ring (FKM) *		794213
	O-Ring (PTFE) *		794208
	O-Ring (Neoprene) *		794090
	O-Ring (Ethylene Propylene) *		794206
61X	O-Ring (Buna-N) *	2	794426
	O-Ring (FKM) *		794425
	O-Ring (PTFE) *		794427
	O-Ring (Neoprene) *		794424
	O-Ring (Ethylene Propylene) *		794428
62B	Machine Screw - Inspection Plate	10	793096
63F	Capscrew - Hex Hd	24	794094
64A	Connecting Rod Bolt	4	794012
68A	Connecting Rod Bolt Nut	4	794013
72A	Elbow - Vent	1	790453
73C	Lock Plug *	6	794028
96	Pipe Plug	8	793498
97	Distance Piece	1	794410

*Included in Gasket Sets

Packing Assembly: HD603C, HDL603C, HDL643C

Ref	Description	Qty	Part No
9B	Packing Spring	6	794041
35A	Retainer Ring	10	794080
35B	Packing Box – Lower TNT-12	2	794445 794463
35C	Packing Set	6	794498
35F	Packing Box – Upper HD(L)603 TNT-12	2	794404 792886
	Packing Box – Upper HDL643 TNT-12	2	794413 792843
37	S3R Seal	2	794456
37A	Seal Cup TNT-12	2	794455 794462
37B	Seal Cup Cover	2	794454
62A	O-ring (Buna-N) O-Ring (FKM) * O-Ring (PTFE) * O-Ring (Neoprene) * O-Ring (Ethylene Propylene) *	2	792311 792313 792312 792314 792320
63K	Capscrew – Socket Head	16	794460
63L	Capscrew – Socket Head	4	794461
67A	Washer - Packing Box	16	794084
102	Packing Installation Tool	1	790538

* Included in gasket sets.

Refer to the Compressor IOM for proper orientation of components.

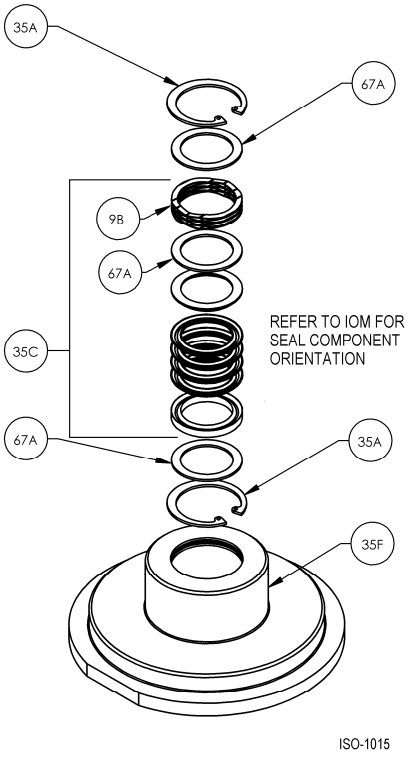

UPPER PACKING ASSEMBLY

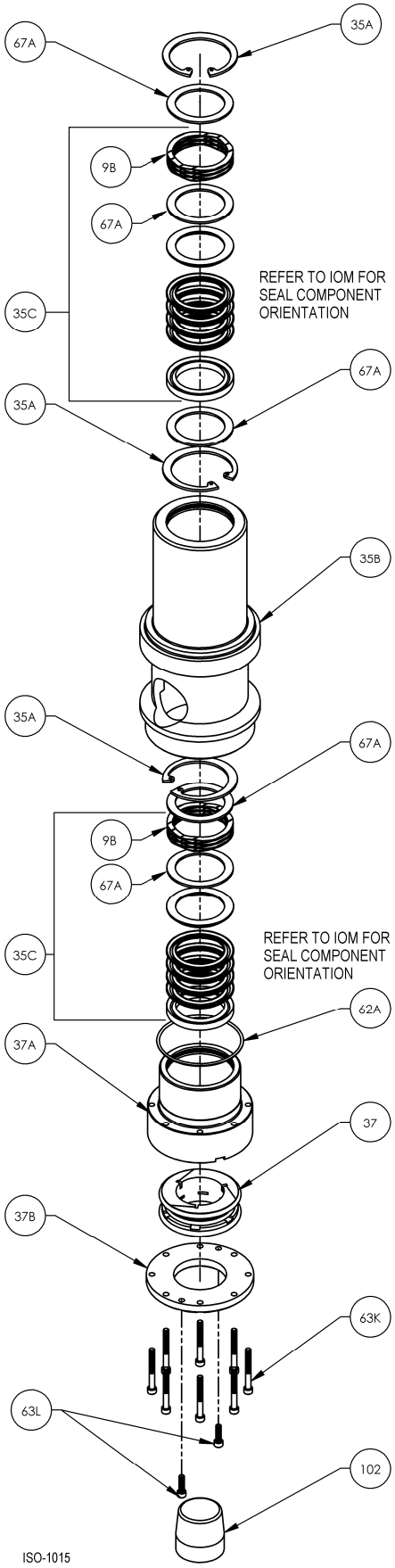

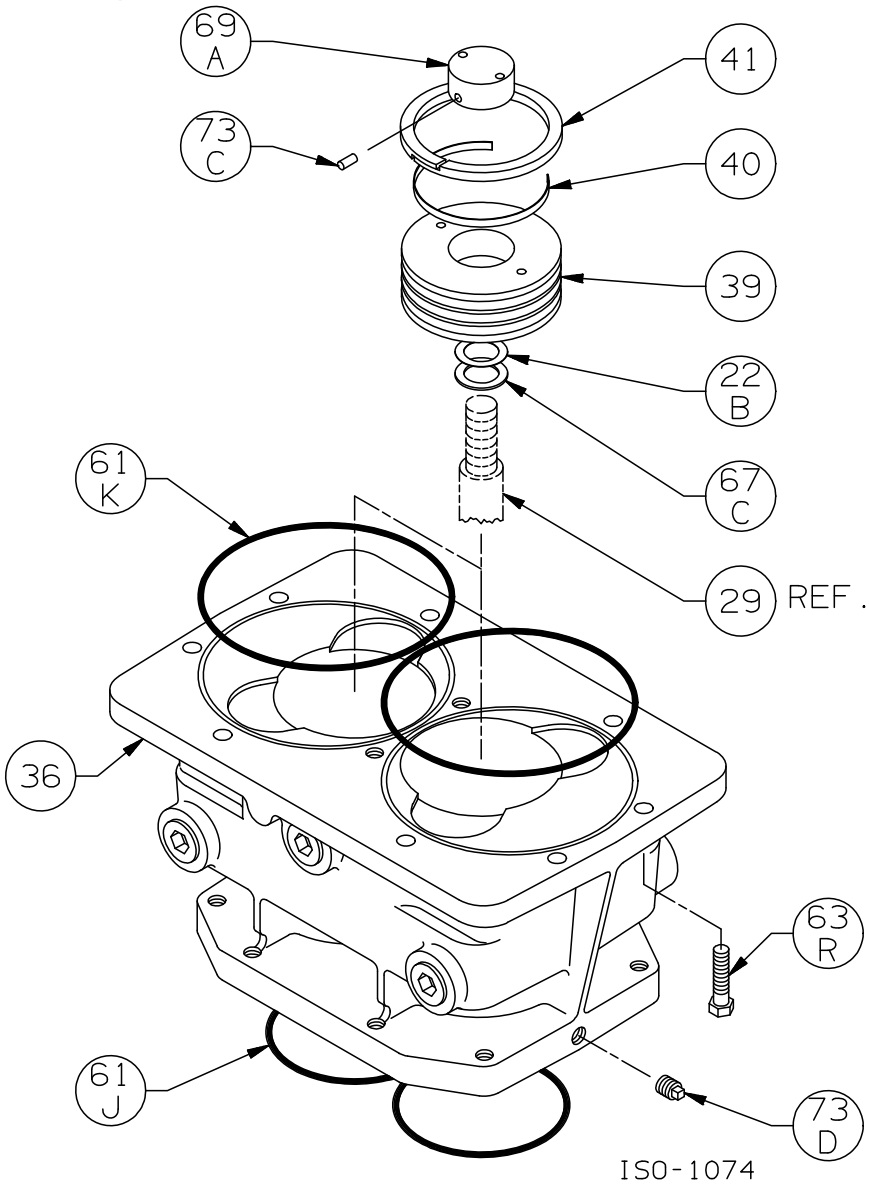

Cylinder Assembly: HDL642C|B, HDL643C|B

ISO1074

Ref	Description	Qty	Part No
22B	Piston Shim - 0.015	AR	794434
	Piston Shim - 0.007	AR	794436
36	Cylinder	1	794505
	Cylinder TNT-12		792890
39	Piston	2	794508
	Piston TNT-12		792891
40	Expander	6	794615
41	Piston Ring – Glass/Moly Filled, Std	6	794611
	Piston Ring - Poly Filled		794613
61J	O-Ring (Buna N) Std *	2	794651
	O-Ring (FKM) *		794653
	O-Ring (PTFE) *		794652
	O-Ring (Neoprene) *		794654
	O-Ring (Ethylene Propylene) *		794655

Ref	Description	Qty	Part No
61K	O-Ring (Buna N) Std *	2	794104
	O-Ring (FKM) *		794106
	O-Ring (PTFE) *		794105
	O-Ring (Neoprene) *		794108
	O-Ring (Ethylene Propylene) *		794110
63R	Capscrew - Hex Hd	8	794097
67C	Thrust Washer	2	794433
69A	Piston Nut	2	794422
	Piston Nut TNT-12		792834
73C	Lock Plug *	4	794222
73D	Pipe Plug	1	793498

* Included in Gasket Sets

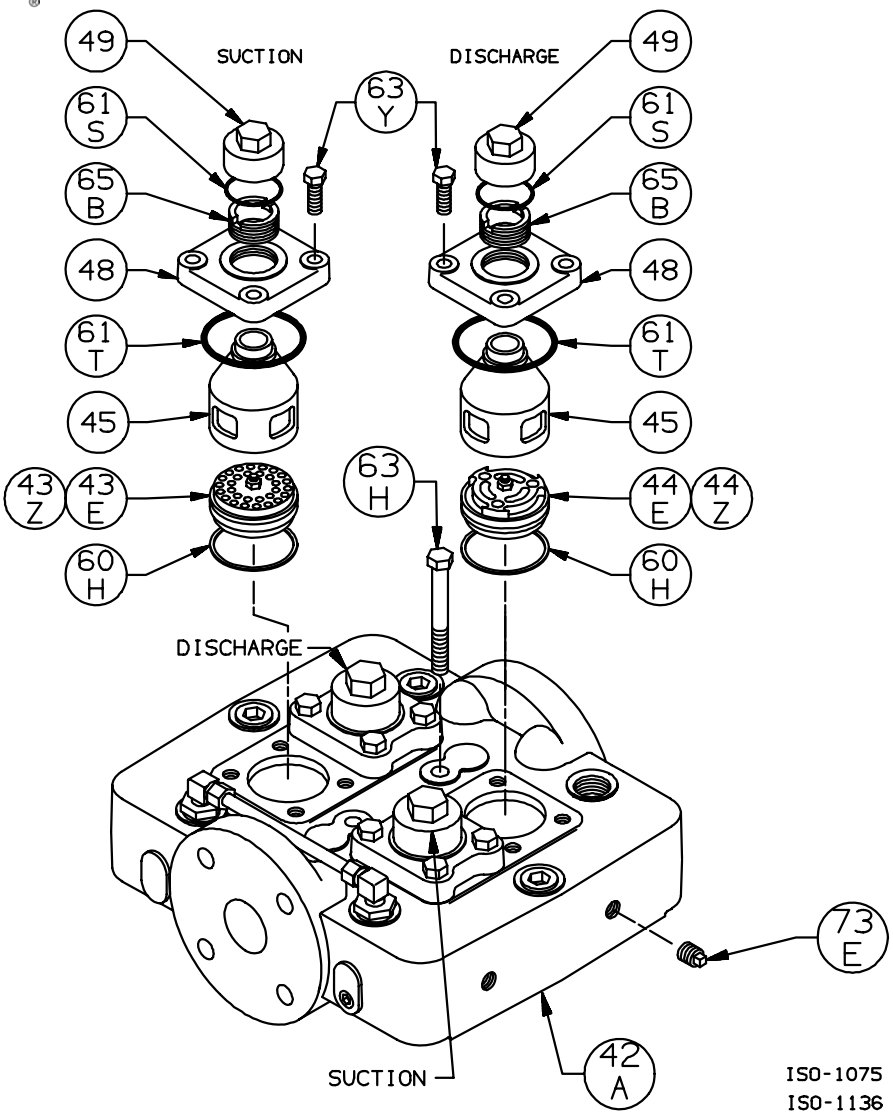

Head Assembly: HDL642C|B, HDL643C|B

ISO1075

Ref	Description	Qty	Part No
42A	Head	1	794504
	Head TNT-12		792877
43E	Suction Valve Assy, Stainless Steel	2	794506
	Suction Valve Assembly TNT-12		792872
	Suction Valve Assembly, PEEK		793659
43Z	Valve Repair Kit - For 794506		794509
	Valve Repair Kit - For 793659/793679		793660
44E	Discharge Valve Assy, Stainless Steel	2	794507
	Discharge Valve Assembly TNT-12		792873
	Discharge Valve Assembly, PEEK		793679
44Z	Valve Repair Kit - For 794507		794510
	Valve Repair Kit - For 793659/793679		793660
45	Cage	4	794620
	Cage TNT-12		792835
48	Valve Cover Plate	4	794284
	Valve Cover Plate TNT-12		792817
49	Valve Cap	4	792003
	Valve Cap TNT-12		792804

Ref	Description	Qty	Part No
60H	Gasket - Valve *	4	794198
61S	O-Ring (Buna-N) Std *	4	792306
	O-Ring (FKM) *		792308
	O-Ring (PTFE) *		792307
	O-Ring (Neoprene) *		792309
	O-Ring (Ethylene Propylene) *		792310
61T	O-Ring (Buna-N) Std *	4	792112
	O-Ring (FKM) *		792213
	O-Ring (PTFE) *		792210
	O-Ring (Neoprene) *		792110
	O-Ring (Ethylene Propylene) *		792206
63H	Capscrew - Hex Hd	2	794115
63Y	Capscrew - Hex Hd	16	793094
65B	Valve Holddown Screw	4	792002
	Valve Holddown Screw TNT-12		792806
73E	Pipe Plug	2	793498

* Included in Gasket Sets

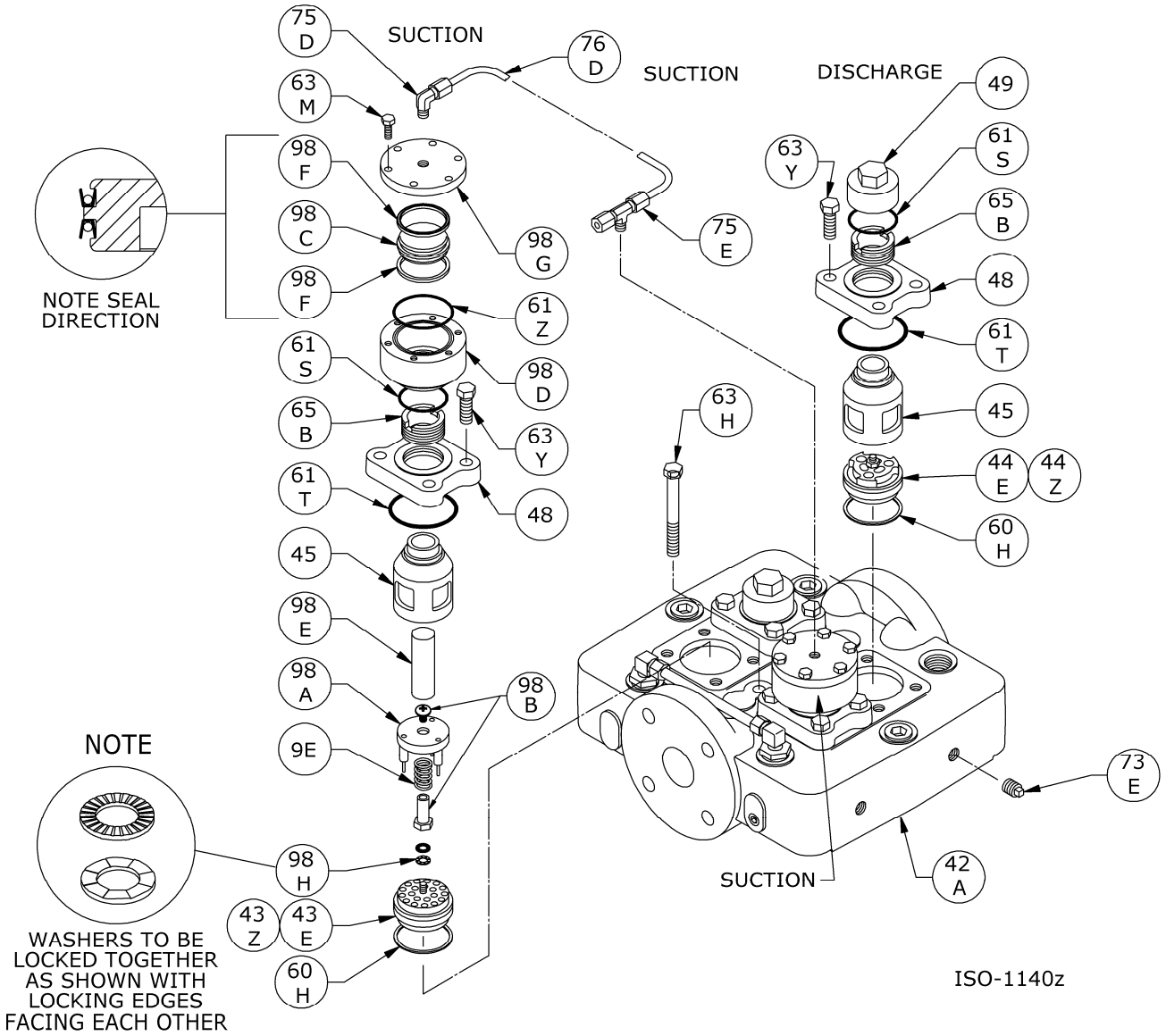

Head Assembly with Unloaders: HDL642C|B, HDL643C|B

ISO1140

OVER.....

Head Assembly with Unloaders: HDL642C|B, HDL643C|B

Ref	Description	Qty	Part No
9E	Unloader Spring	2	793293
42A	Head	1	794504
	Head TNT-12		792877
43E	Suction Valve Assy, Stainless Steel	2	794506
	Suction Valve Assembly TNT-12		792872
	Suction Valve Assembly, PEEK		793659
43Z	Valve Repair Kit - For 794506		794509
	Valve Repair Kit - For 793659/793679		793660
44E	Discharge Valve Assy, Stainless Steel		794507
	Discharge Valve Assembly TNT-12		792873
	Discharge Valve Assembly, PEEK	2	793679
44Z	Valve Repair Kit - For 794507		794510
	Valve Repair Kit - For 793659/793679		793660
45	Cage	4	794620
	Cage TNT-12		792835
48	Valve Cover Plate	4	794284
	Valve Cover Plate TNT-12		792817
49	Valve Cap	2	792003
	Valve Cap TNT-12		792804
60H	Gasket - Valve *	4	794198
61S	O-Ring (Buna-N) Std *	4	792306
	O-Ring (FKM) *		792308
	O-Ring (PTFE) *		792307
	O-Ring (Neoprene) *		792309
	O-Ring (Ethylene Propylene) *		792310
61T	O-Ring (Buna-N) Std *	4	792112
	O-Ring (FKM) *		792213
	O-Ring (PTFE) *		792210
	O-Ring (Neoprene) *		792110
	O-Ring (Ethylene Propylene) *		792206

Ref	Description	Qty	Part No
61Z	O-Ring (Buna-N) Std *	2	792311
	O-Ring (FKM) *		792313
	O-Ring (PTFE) *		792312
	O-Ring (Neoprene) *		792314
	O-Ring (Ethylene Propylene) *		792320
63H	Capscrew - Hex Hd	2	794115
63M	Capscrew - Hex Hd	12	790053
63Y	Capscrew - Hex Hd	16	793094
65B	Valve Holddown Screw	4	792002
	Valve Holddown Screw TNT-12		792806
73E	Pipe Plug	2	793498
75D	Tube Elbow	1	790355
75E	Tube Tee	1	790356
76D	Tube	1	790192
98A	Actuator Assembly	2	794296
	Actuator Assy, for SS Valve		794298
98B	Unloader Post w/bolt [1]	2	793291
	Unloader Post w/bolt [1], for SS Valve		794291
98C	Unloader Piston	2	793288
98D	Unloader Body	2	793286
98E	Unloader Plunger	2	794290
98F	Unloader Seal	4	792284
98G	Unloader Cap	2	793287
98H	Lockwasher (2 Piece)	2	793473

* Included in Gasket Sets

[1] Unloader Post with bolt replaces earlier style unloader post with retainer ring.

Suggested Spare Parts for HDL643C compressors:

Part #	Description	Qty./ Unit	Comm. Qty.	Spare Qty.
794594 794593 794592 794590 794589	Gasket Set – Buna-N Gasket Set - PTFE * Gasket Set - FKM * Gasket Set - Neoprene * Gasket Set - Ethylene Propylene *	1	1	1
794509 793660	Suction Valve Repair Kit - Stainless Steel Suction Valve Repair Kit – PEEK *	2		2
794510 793660	Discharge Valve Repair Kit - Stainless Steel Discharge Valve Repair Kit – PEEK *	2		2
792284	Unloader Seal *	4		4
794611 794613	Piston Ring - Glass and Moly Filled Piston Ring - Poly Filled *	6	6	6
794615	Piston Ring Expander	6	6	6
794498	Packing Set	6	6	6
790538	Packing Installation Tool	1	1	1
794726	Oil Filter	1		6
794727	Wrist Pin	2		2
794776	Wrist Pin Roller Bearing	4	4	4
794710	Conrod Bearing	2	2	2
The following parts would normally be required only for major compressor overhaul.				
794730	Inboard Bearing Cone	1		1
794731	Inboard Bearing Cup	1		1
794130	Outboard Bearing Cone	1		1
794131	Outboard Bearing Cup	1		1
794435	Crosshead Assembly	2		2
794456	S3R Seal	2		2
794767	Conrod Assembly	2		
794760	Oil Pump Repair Kit	1		
794708	Crankshaft Assembly	1		
794733	Bearing Adjustment Shim Kit	1		
794505 792890	Cylinder TNT-12 Treated Cyl. *	1		

* Optional Equipment on New Compressors

OPW market
Дистрибутор: ОПВ Маркет ЕООД
България, София 1528, ул."Поручик Неделчо Бончев" 3, ет.5
+359 2 973 27 67, +359 2 973 2370; office_bg@opwmarket.com