HD372B PARTS LIST

Discontinued Model – parts availability may be limited.

Serial #_____ ID#_____ _____ _____

Gasket Sets and Special Tools

Gasket Set	Buna-N & Iron	793699
	PTFE & Iron	793698
	FKM & Iron	793697
	Neoprene & Iron	793693
	Ethylene Propylene & Iron	793691
Packing Installation Tool		790536
Packing Installation Tool		790536
Spanner Wrench, 1/4" Adjustable		790316
Wrench for Valve Holdown Screw		790535
Tool Kit		790199

Bulletins Needed For Complete Parts List

This page	9E-091
Crankcase	9F-021
Oil Pump	9G-011
Flywheel	9H-020
Crosshead	9J-050
Cylinder	9L-050
Head	9M-070
Head with Unloaders	9M-080

Notes:

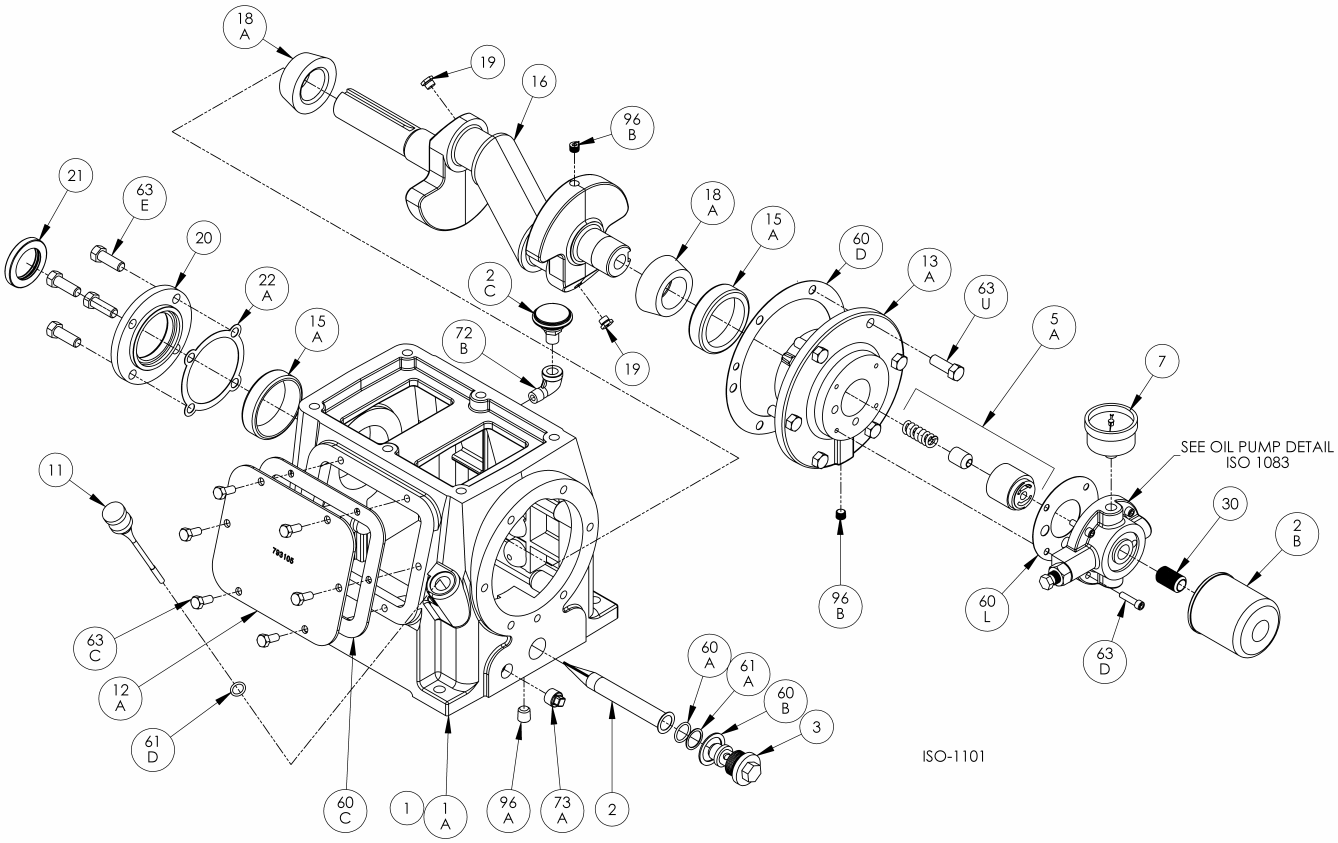

Crankcase Assembly:
Models HDL342B, HDL343B, HDL342C, HDL343C, HDL322C
HDL362B, HDL363B, HDL362C, HDL363C
HD361B, HD361C, HD362B, HD362C, HD363B, HD363C, HDS362C,
HD372B, HD372C, HD373B, HD373C, HDL372B, HDL372C, HDL373B, HDL373C, HDS372C ISO1101

Ref	Description	Qty	Part No
1	Crankcase Assembly - Oil Filter	1	793100
	Crankcase Assembly - no Oil Filter		793103
	Crankcase Assy - Ext Shaft & Oil Filter		793171
	Crankcase Assy - Ext Shaft, no Oil Filter		793155
1A	Crankcase	1	793102
2	Oil Intake Screen	1	792135
2B	Oil Filter	1	794726
2C	Breather Filter	1	792070
3	Oil Screen Plug	1	792145
5A	Oil Pump Kit	1	794760
7	Oil Pressure Gauge	1	790012
11	Oil Bayonet Assembly	1	792162
12A	Inspection Plate	1	793105
13A	Bearing Carrier	1	793104
15A	Bearing Cup	2	793126
16	Crankshaft Assembly (w\ 18A,19,96B)	1	793157
	Crankshaft Assembly-Ext (w\ 18A,19,96B)		793191
18A	Bearing Cone	2	793142
19	Orifice	2	792146

Ref	Description	Qty	Part No
20	Bearing Cover Plate	1	793106
21	Oil Seal	1	793143
22A	Bearing Adjustment Shim Kit	1	793133
30	Oil Filter Fitting	1	794725
60A	Gasket - Oil Screen *	1	792136
60B	Gasket - Oil Screen Plug *	1	792123
60C	Gasket - Inspection Plate *	1	793122
60D	Gasket - Bearing Carrier Assembly*	1	793124
60L	Gasket - Oil Pump Cover *	1	794721
61A	O-Ring - Oil Screen *	1	792175
61D	O-Ring - Oil Bayonet *	1	792174
63C	Capscrew - Hex Hd	6	793116
63D	Capscrew - Soc Hd	4	790559
63E	Capscrew - Hex Hd	4	792093
63U	Capscrew - Hex Hd	6	792093
72B	Elbow	1	790453
73A	Pipe Plug	1	792166
96A	Pipe Plug	1	790488
96B	Pipe Plug	2	790309

* Included in Gasket Sets

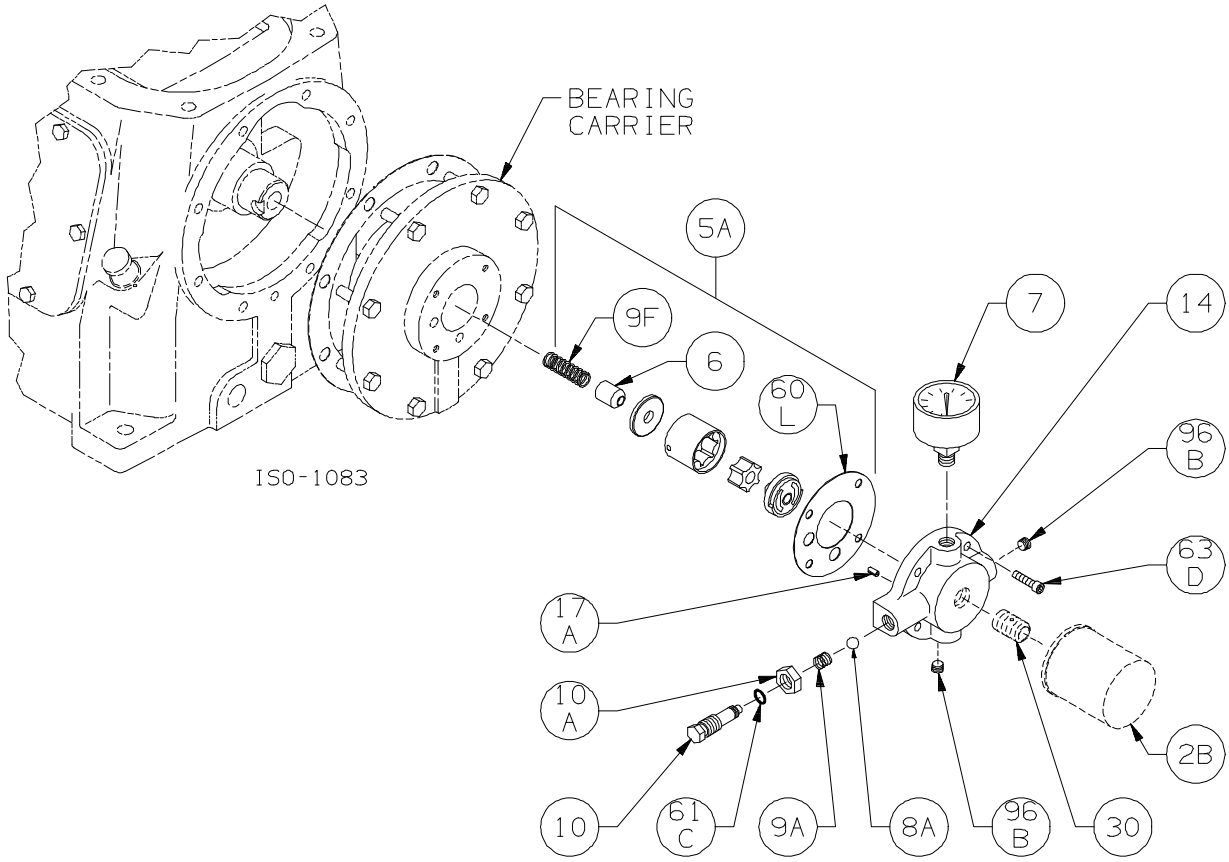

Oil Pump Detail for Models:
HD161C, HD161B, HD162C, HD162B, HD163C, HD163B,
HD172C, HD172B, HD173C, HD173B,
HDL341B, HDL342B, HDL343B, HDL341C, HDL342C, HDL343C,
HD361C, HD361B, HD362C, HD362B, HD363C, HD363B
HDL361B, HDL362B, HDL363B, HDL361C, HDL362C, HDL363C,
HD372C, HD372B, HDL372C, HDL372B, HD373C, HD373B, HDL373C, HDL373B,
HD601B, HD602B, HD603B, HDL601B, HDL602B, HDL603B,
HD612B, HDL612B, HD613B, HDL613B,
HD942A and HDL942A

ISO1083

Ref	Description	Qty	Part No
2B	Oil Filter	1	794726
5A	Oil Pump Kit (w/ 6, 9F, 60L)		794760
6	Oil Pump Cone	1	794750
7	Oil Pressure Gauge	1	790012
8A	Oil Pressure Adj. Ball	1	792154
9A	Oil Pressure Adj. Spring	1	792153
9F	Oil Pump Spring	1	794751
10	Oil Pressure Adj. Screw	1	792148
10A	Locknut	1	792152

Ref	Description	Qty	Part No
14	Oil Pump Cover Assembly - For Filter with 17A, 96B	1	794764
	Oil Pump Cover Assembly - w\ 17A, 96B		794763
17A	Roll Pin	1	794753
30	Oil Filter Fitting	1	794725
60L	Gasket - Oil Pump Cover *	1	794721
61C	O-Ring - Adjusting Screw *	1	792168
63D	Capscrew - Soc. Hd	4	790559
96B	Pipe Plug	2	790309

* Included in Gasket Sets

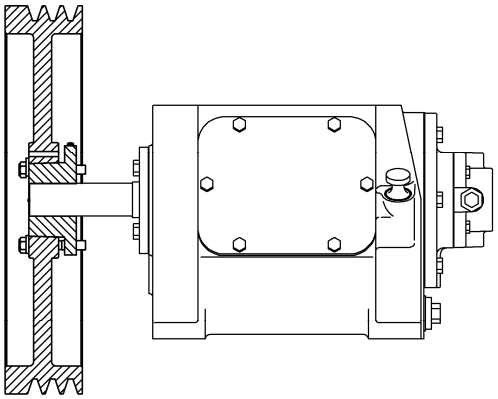

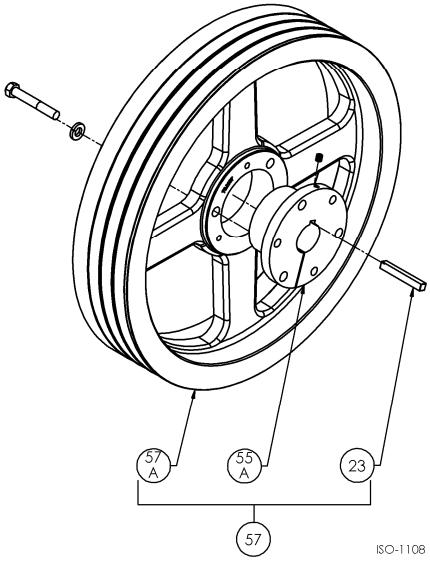

MODELS:

HD361C, HD361B
HD362C, HD362B
HD363C, HD363B
HD372C, HD372B
HD373C, HD373B

HDS362C
HDS372C

HDL322C, HDL323C
HDL342C, HDL342B
HDL343C, HDL343B
HDL362C, HDL362B
HDL363C, HDL363B
HDL372C, HDL372B
HDL373C, HDL373B

Ref	Description	Qty	Part No
23	Key	1	793167
55A	Hub	1	790143
57	Flywheel Assembly	1	793047
57A	Flywheel	1	792197

Note: Earlier HD372C, HD372, HD373C and HD373B air-cooled compressors had a fan fitted to the flywheel.

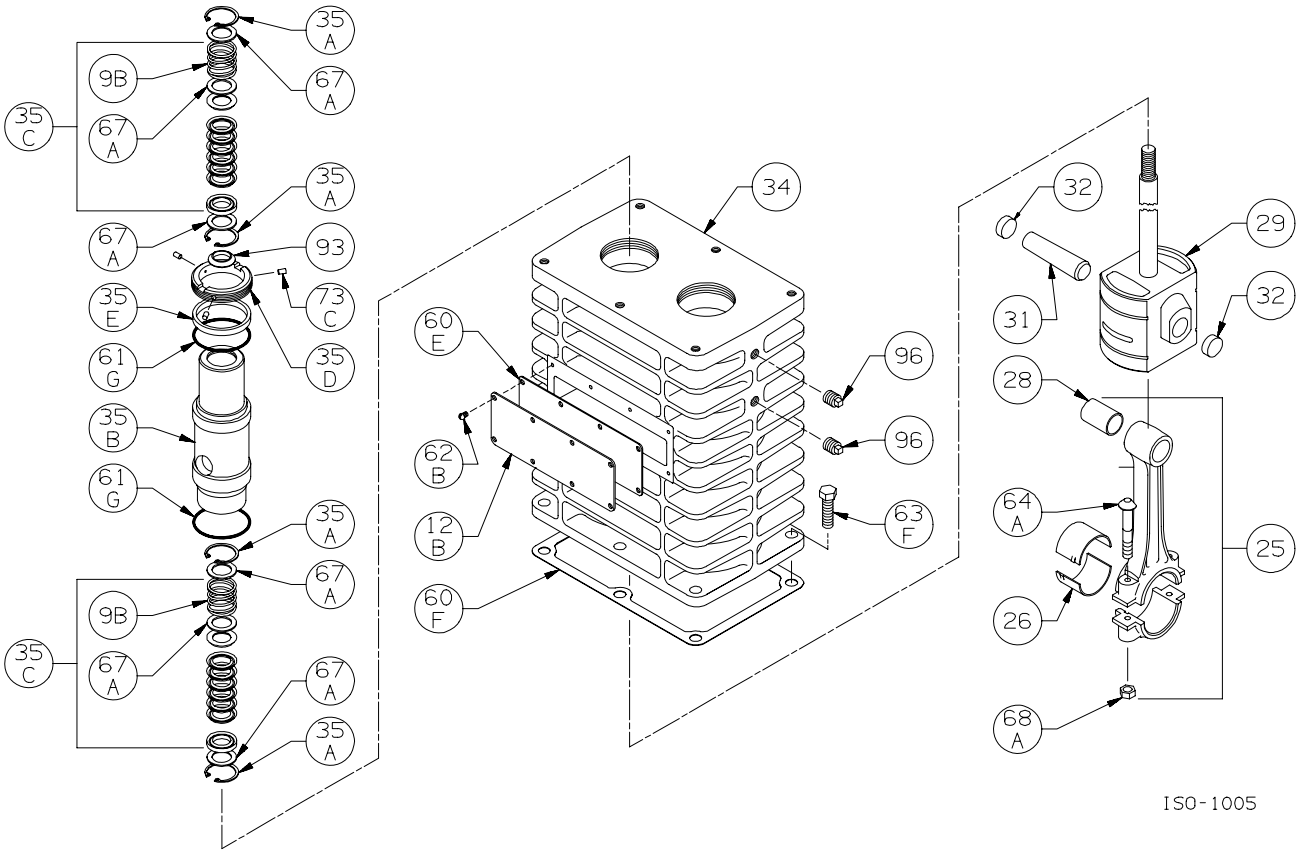

Crosshead Assembly: HD362A, HD362B
HD372A, HD372B, HDL372A, HDL372B

ISO1005

Ref	Description	Qty	Part No
9B	Packing Spring	4	792077
12B	Inspection Plate	1	793093
25	Connecting Rod Assembly	2	793009
26	Connecting Rod Bearing	2	793002
28	Wrist Pin Bushing **	2	793003
29	Crosshead Assembly	2	793429
31	Wrist Pin	2	793004
32	Wrist Pin Plug	4	792178
34	Crosshead Guide	1	793455
35A	Retainer Ring	8	793404
35B	Packing Box	2	793403
	Packing Box TNT-12		792820
35C	Packing Set	4	793510
35D	Hold-down Ring	2	793220
	Hold-down Ring TNT-12		792810
35E	Spacer Ring	2	793402
	Spacer Ring TNT-12		792821

Ref	Description	Qty	Part No
60E	Gasket - Inspection Plate *	1	793092
60F	Gasket - Crankcase *	1	793121
61G	O-Ring (Buna-N) Std *	4	792125
	O-Ring (FKM) *		793213
	O-Ring (PTFE) *		793211
	O-Ring (Neoprene) *		793215
	O-Ring (Ethylene Propylene) *		793207
62B	Machine Screw - Inspection Plate	8	793096
63F	Capscrew - Hex Hd	6	793094
64A	Connecting Rod Bolt	4	793006
67A	Washer - Packing Box	12	792087
68A	Connecting Rod Bolt Nut	4	793007
73C	Lock Plug *	6	792030
93	Oil Deflector Ring	2	793478
96	Pipe Plug	4	793498

*Included in Gasket Sets

** Must be honed after installing

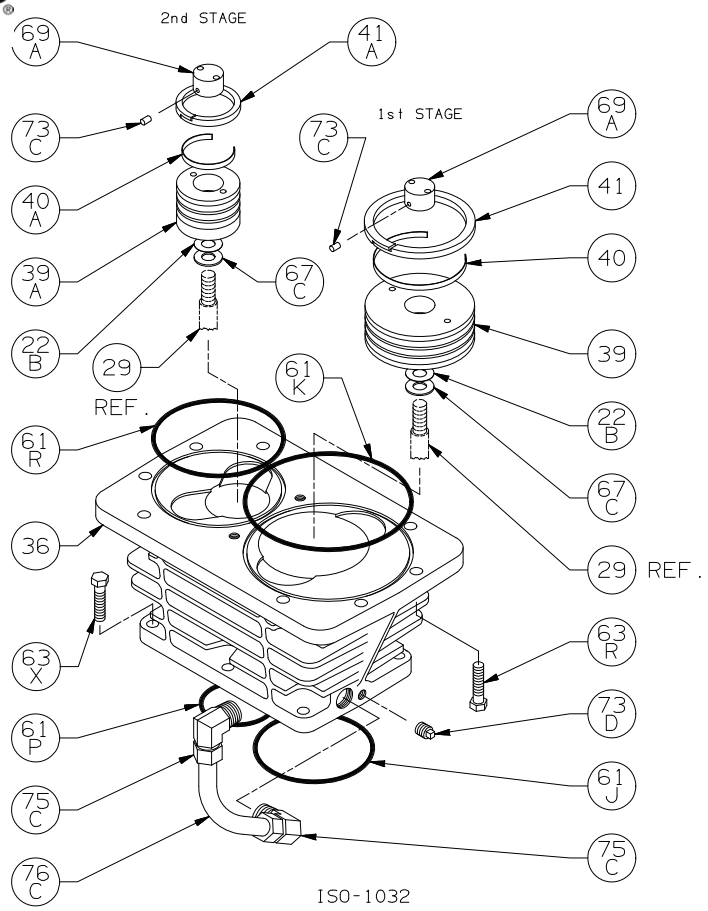

Cylinder Assembly: Models HD372A, HD372B, HD372C, HD373A, HD373B, HD373C ISO1032

Ref	Description	Qty	Part No
22B	Piston Shim - 0.015	AR	792034
	Piston Shim - 0.007	AR	792050
36	Cylinder	1	793601
	Cylinder TNT-12		792812
39	Piston	1	793621
	Piston TNT-12		792813
39A	Piston	1	793622
	Piston TNT-12		792814
40	Expander	3	793614
40A	Expander	3	793615
41	Piston Ring – Glass/Moly Filled, Std	3	793610
	Piston Ring - Poly Filled		793612
41A	Piston Ring – Glass/Moly Filled, Std	3	793611
	Piston Ring - Poly Filled		793613
61J	O-Ring (Buna N) Std *	1	794126
	O-Ring (FKM) *		794214
	O-Ring (PTFE) *		794125
	O-Ring (Neoprene) *		794142
	O-Ring (Ethylene Propylene) *		794210
61K	O-Ring (Buna N) Std *	1	793631
	O-Ring (FKM) *		793633
	O-Ring (PTFE) *		793632
	O-Ring (Neoprene) *		793634
	O-Ring (Ethylene Propylene) *		793638

Ref	Description	Qty	Part No
61P	O-Ring (Buna N) Std *	1	794082
	O-Ring (FKM) *		794213
	O-Ring (PTFE) *		794165
	O-Ring (Neoprene) *		794090
	O-Ring (Ethylene Propylene) *		794206
61R	O-Ring (Buna N) Std *	1	793641
	O-Ring (FKM) *		793643
	O-Ring (PTFE) *		793642
	O-Ring (Neoprene) *		793644
	O-Ring (Ethylene Propylene) *		793645
63R	Capscrew - Hex Hd	8	794097
63X	Capscrew - Hex Hd	6	794096
67C	Thrust Washer	2	792033
69A	Piston Nut	2	793022
	Piston Nut TNT-12		792808
73C	Lock Plug *	4	793028
73D	Pipe Plug	1	793498
75C	Tube Elbow	2	790393
76C	Tube	1	790394

* Included in Gasket Sets

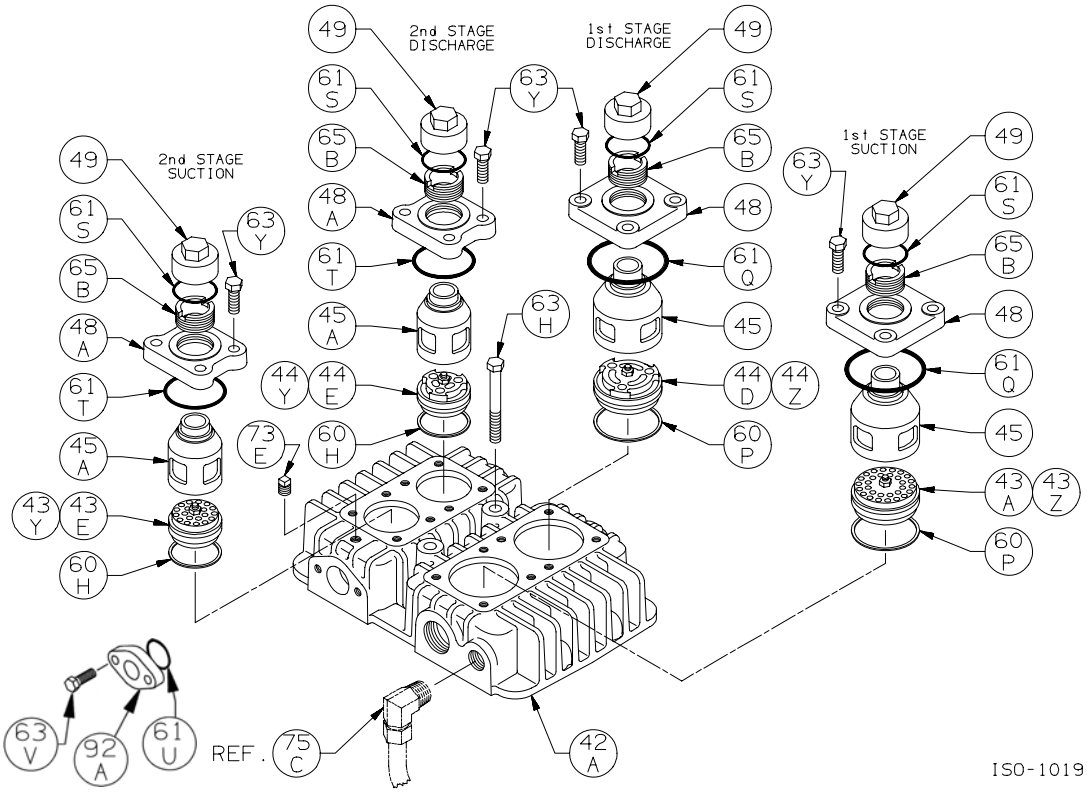

Head Assembly: Models HD372A, HD372B, HD372C, HD373A, HD373B, HD373C ISO1019

Ref	Description	Qty	Part No
42A	Head	1	793600
	Head TNT-12		792815
43A	Suction Valve Assembly	1	793659
	Suction Valve Assembly TNT-12		792872
	Suction Valve Assembly, Stainless Steel		793629
43E	Suction Valve Assembly	1	793459
	Suction Valve Assembly TNT-12		792870
	Suction Valve Assembly, Stainless Steel		793439
43Y	Valve Repair Kit - For 793459/793479		793460
	Valve Repair Kit - For 793439		793440
43Z	Valve Repair Kit - For 793659/793679		793660
	Valve Repair Kit - For 793629		793630
44D	Discharge Valve Assembly	1	793679
	Discharge Valve Assembly TNT-12		792873
	Discharge Valve Assembly, Stainless Steel		793649
44E	Discharge Valve Assembly	1	793479
	Discharge Valve Assembly TNT-12		792871
	Discharge Valve Assembly, Stainless Steel		793449
44Y	Valve Repair Kit - For 793459/793479		793460
	Valve Repair Kit - For 793449		793448
44Z	Valve Repair Kit - For 793659/793679		793660
	Valve Repair Kit - For 793649		793650
45	Cage	2	793620
	Cage TNT-12		792819
45A	Cage	2	793420
	Cage TNT-12		792818
48	Valve Cover Plate	2	794284
	Valve Cover Plate TNT-12		792817

* Included in Gasket Sets

Ref	Description	Qty	Part No
48A	Valve Cover Plate	2	793284
	Valve Cover Plate TNT-12		792816
49	Valve Cap	4	792003
	Valve Cap TNT-12		792804
60H	Gasket - Valve *	2	793202
60P	Gasket - Valve *	2	794198
61Q	O-Ring (Buna-N) Std *	2	792112
	O-Ring (FKM) *		792213
	O-Ring (PTFE) *		792210
	O-Ring (Neoprene) *		792110
	O-Ring (Ethylene Propylene) *		792206
61S	O-Ring (Buna-N) Std *	4	792306
	O-Ring (FKM) *		792308
	O-Ring (PTFE) *		792307
	O-Ring (Neoprene) *		792309
	O-Ring (Ethylene Propylene) *		792310
61T	O-Ring (Buna-N) Std *	2	793114
	O-Ring (FKM) *		793214
	O-Ring (PTFE) *		793208
	O-Ring (Neoprene) *		793110
	O-Ring (Ethylene Propylene) *		793205
61U	O-Ring (PTFE) Intercooler Flange *	2	793626
63H	Capscrew - Hex Hd	2	793115
63V	Capscrew – Intercooler Flange	4	793094
63Y	Capscrew - Hex Hd	16	793094
65B	Valve Holddown Screw	4	792002
	Valve Holddown Screw TNT-12		792806
73E	Pipe Plug	1	793498
92A	Intercooler Flange – 1" NPT	2	793602

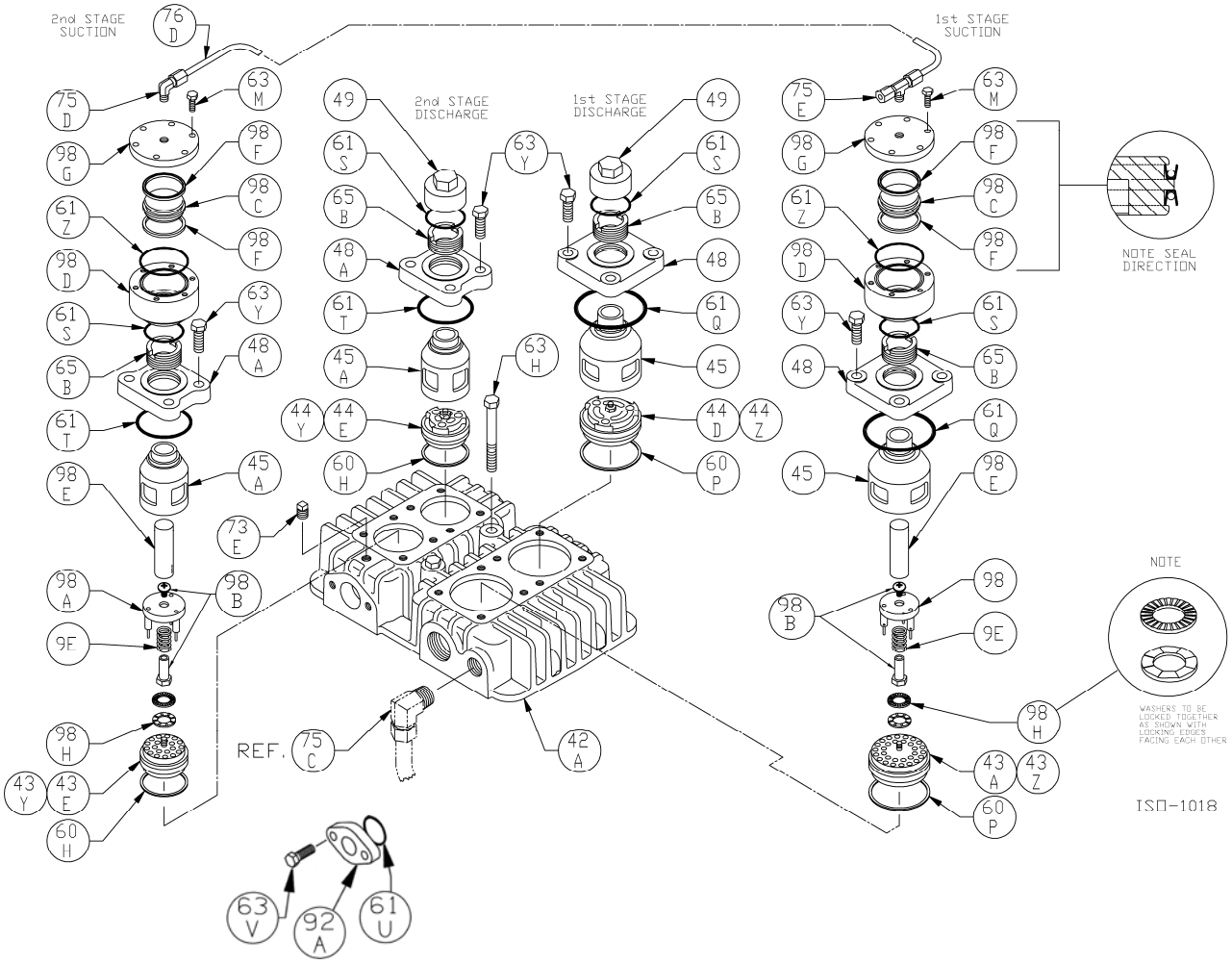

Head Assembly with Unloaders:
Models HD372A, HD372B, HD372C, HD373A, HD373B, HD373C

Over.....

Head Assembly with Unloaders: ISO1018

Models HD372A, HD372B, HD372C, HD373A, HD373B, HD373C

Ref	Description	Qty	Part No
9E	Unloader Spring	2	793293
42A	Head	1	793600
	Head TNT-12		792815
43A	Suction Valve Assembly	1	793659
	Suction Valve Assembly TNT-12		792872
	Suction Valve Assy, Stainless Steel		793629
43E	Suction Valve Assembly	1	793459
	Suction Valve Assembly TNT-12		792870
	Suction Valve Assy, Stainless Steel		793439
43Y	Valve Repair Kit - For 793459/793479		793460
	Valve Repair Kit - For 793439		793440
43Z	Valve Repair Kit - For 793659/793679		793660
	Valve Repair Kit - For 793629		793630
44D	Discharge Valve Assembly	1	793679
	Discharge Valve Assembly TNT-12		792873
	Discharge Valve Assy, Stainless Steel		793649
44E	Discharge Valve Assembly	1	793479
	Discharge Valve Assembly TNT-12		792871
	Discharge Valve Assy, Stainless Steel		793449
44Y	Valve Repair Kit - For 793459/793479		793460
	Valve Repair Kit - For 793449		793448
44Z	Valve Repair Kit - For 793659/793679		793660
	Valve Repair Kit - For 793649		793650
45	Cage	2	793620
	Cage TNT-12		792819
45A	Cage	2	793420
	Cage TNT-12		792818
48	Valve Cover Plate	2	794284
	Valve Cover Plate TNT-12		792817
48A	Valve Cover Plate	2	793284
	Valve Cover Plate TNT-12		792816
49	Valve Cap	2	792003
	Valve Cap TNT-12		792804
60H	Gasket - Valve *	2	793202
60P	Gasket - Valve *	2	794198
61Q	O-Ring (Buna-N) Std *	2	792112
	O-Ring (FKM) *		792213
	O-Ring (PTFE) *		792210
	O-Ring (Neoprene) *		792110
	O-Ring (Ethylene Propylene) *		792206

* Included in Gasket Sets

Ref	Description	Qty	Part No
61S	O-Ring (Buna-N) Std *	4	792306
	O-Ring (FKM) *		792308
	O-Ring (PTFE) *		792307
	O-Ring (Neoprene) *		792309
	O-Ring (Ethylene Propylene) *		792310
61T	O-Ring (Buna-N) Std *	2	793114
	O-Ring (FKM) *		793214
	O-Ring (PTFE) *		793208
	O-Ring (Neoprene) *		793110
	O-Ring (Ethylene Propylene) *		793205
61U	O-Ring (PTFE) Intercooler Flange *	2	793626
61Z	O-Ring (Buna-N) Std *	2	792311
	O-Ring (FKM) *		792313
	O-Ring (PTFE) *		792312
	O-Ring (Neoprene) *		792314
	O-Ring (Ethylene Propylene) *		792320
63H	Capscrew - Hex Hd	2	793115
63M	Capscrew - Hex Hd	12	790053
63V	Capscrew – Intercooler Flange	4	793094
63Y	Capscrew - Hex Hd	16	793094
65B	Valve Holddown Screw	4	792002
	Valve Holddown Screw TNT-12		792806
73E	Pipe Plug	1	793498
75D	Tube Elbow	1	790355
75E	Tube Tee	1	790356
76D	Tube	1	790192
92A	Intercooler Flange – 1" NPT	2	793602
98	Actuator Assembly - 1st Stage	1	794296
	Actuator Assy - 1st St, for SS Valve		794298
98A	Actuator Assembly - 2nd Stage	1	793296
	Actuator Assy - 2nd St, for SS Valve		793298
98B	Unloader Post w/bolt [1]	2	793291
	Unloader Post w/bolt [1], for SS Valve		794291
98C	Unloader Piston	2	793288
98D	Unloader Body	2	793286
98E	Unloader Plunger	2	793290
98F	Unloader Seal	4	792284
98G	Unloader Cap	2	793287
98H	Lockwasher (2 piece)	2	793473

[1] Unloader Post with bolt replaces earlier style unloader post with retainer ring.

Suggested Spare Parts for HD372B and HDL372B compressors:

Part #	Description	Qty./ Unit	Comm. Qty.	Spare Qty.
793699 793698 793697 793693 793691	Gasket Set - Buna-N Gasket Set - PTFE * Gasket Set - FKM * Gasket Set - Neoprene * Gasket Set - Ethylene Propylene *	1	1	1
793660 793630	St1 Suction Valve Repair Kit - PEEK St1 Suction Valve Repair Kit - Stainless Steel *	1		1
793460 793440	St2 Suction Valve Repair Kit - PEEK St2 Suction Valve Repair Kit - Stainless Steel *	1		
793660 793650	St1 Discharge Valve Repair Kit - PEEK St1 Discharge Valve Repair Kit - Stainless Steel *	1		1
793460 793448	St2 Discharge Valve Repair Kit - PEEK St2 Discharge Valve Repair Kit - Stainless Steel *	1		1
792284	Unloader Seal *	4		4
793610 793612	St1 Piston Ring - Standard St1 Piston Ring - Poly Filled *	3	3	3
793614	St1 Piston Ring Expander	3	3	3
793611 793613	St2 Piston Ring - Standard St2 Piston Ring - Poly Filled *	3		3
793615	St2 Piston Ring Expander	3		3
793510	Packing Set	4	4	4
794726	Oil Filter *	1		6
793004	Wrist Pin	2		2
793003	Wrist Pin Bushing	2	2	2
793002	Conrod Bearing	2	2	2
The following parts would normally be required only for major compressor overhaul.				
793142	Bearing Cone	2		2
793126	Bearing Cup	2		2
793429	Crosshead Assembly	2		1
793009	Conrod Assembly	2		1
794760	Oil Pump Repair Kit	1		
793157	Crankshaft Assembly	1		
793133	Bearing Adjustment Shim Kit	1		
793601 792812 793701 792822	Cylinder (HD372) Cylinder, TNT-12 PTFE / Nickel Treated * Cylinder (HDL372) Cylinder, TNT-12 PTFE / Nickel Treated *	1 1		

* Optional Equipment on New Compressors

OPW market
Дистрибутор: ОПВ Маркет ЕООД
България, София 1528, ул."Поручик Неделчо Бончев" 3, ет.5
+359 2 973 27 67, +359 2 973 2370; office_bg@opwmarket.com