HD161A PARTS LIST

Discontinued Model – parts availability may be limited.

Serial #_____ ID#_____ _____ _____

Gasket Sets and Special Tools

Gasket Set	Buna-N & Iron	792098
	FKM & Iron	792219
	PTFE & Iron	792209
	Neoprene & Iron	792097
	Ethylene Propylene & Iron	792199
Packing Installation Tool		790536
Spanner Wrench, 1/4" Adjustable		790316
Wrench for Valve Holdown Screw		790535
Tool Kit		790199

Notes:

Bulletins Needed For Complete Parts List

This page	9E-010
Crankcase	9F-010
Oil Pump	9G-010
Crosshead	9J-010
Cylinder	9L-010
Head	9M-010
Head with Unloaders	9M-020

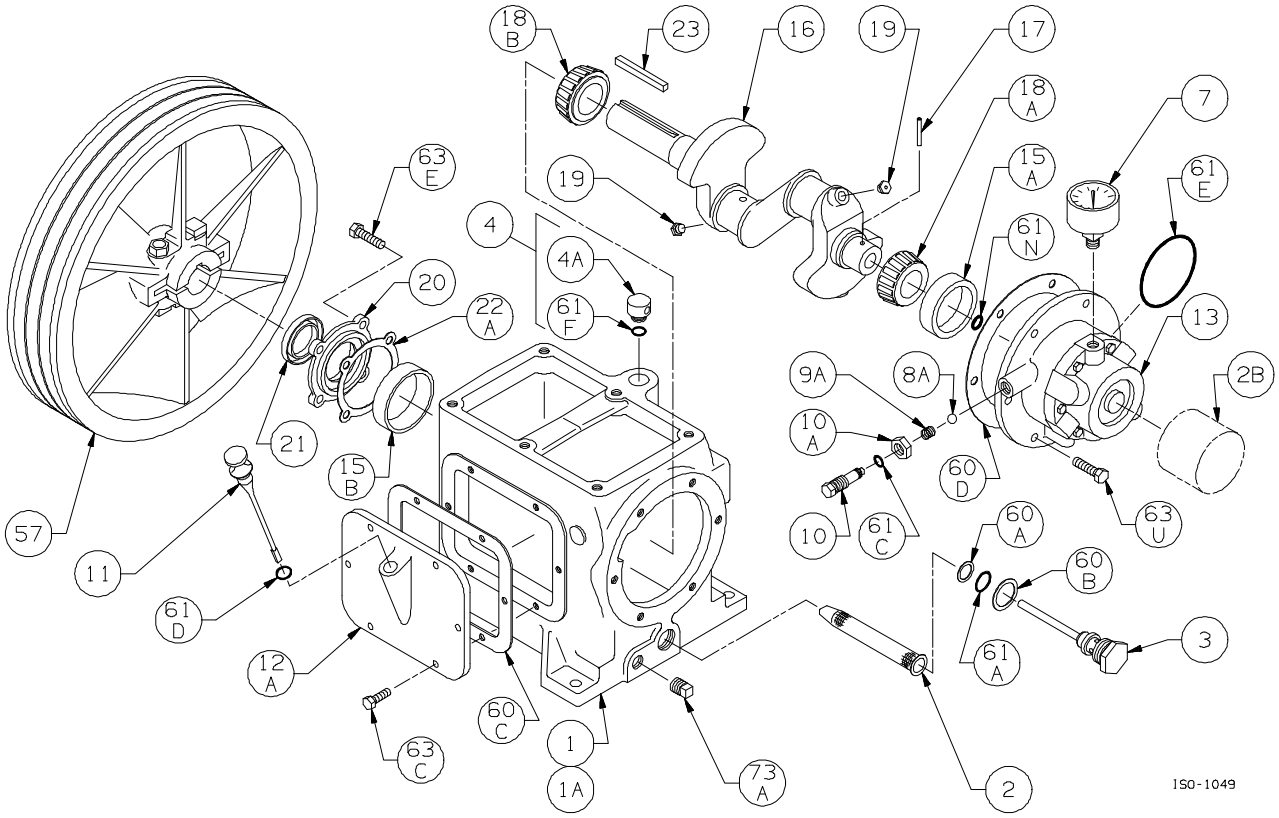

Crankcase Assembly: Models HD161A, HD162A, HD172A

ISO1049

Ref	Description	Qty	Part No
1	Crankcase Assembly (Less Flywheel)	1	792119
1A	Crankcase	1	792134
2	Oil Intake Screen	1	792135
2B	Oil Filter	1	790003
3	Oil Screen Plug	1	792145
4	Breather Assembly	1	793149
4A	Breather Cap	1	792144
7	Oil Pressure Gauge	1	790012
8A	Oil Pressure Adjusting Ball	1	792154
9A	Oil Pressure Adjusting Spring	1	792153
10	Oil Pressure Adjusting Screw	1	792148
10A	Locknut	1	792152
11	Oil Bayonet Assembly	1	792162
12A	Inspection Plate	1	792131
13	Bearing Carrier Assembly	1	792179
	Bearing Carrier Assembly with Oil Filter		792170
15A	Bearing Cup (Outboard)	1	792138
15B	Bearing Cup (Inboard)	1	792126
16	Crankshaft Assembly (w/ 18A, 18B, 19)	1	792159
	Crankshaft Assembly - Extended		792169
17	Oil Pump Drive Pin	1	792147
18A	Bearing Cone (Outboard)	1	792142

Ref	Description	Qty	Part No
18B	Bearing Cone (Inboard)	1	792127
19	Orifice	2	792146
20	Bearing Cover Plate	1	792137
21	Oil Seal	1	792143
22A	Bearing Adjustment Shim Kit	1	792133
23	Key	1	792167
57	Flywheel Assembly	1	792128
60A	Gasket - Oil Screen *	1	792136
60B	Gasket - Oil Screen Plug *	1	792123
60C	Gasket - Inspection Plate *	1	792122
60D	Gasket - Bearing Carrier Assembly *	1	792124
61A	O-Ring - Oil Screen *	1	792175
61C	O-Ring - Adjusting Screw *	1	792168
61D	O-Ring - Oil Bayonet *	1	792174
61E	O-Ring - Oil Pump Cover *	1	792186
61F	O-Ring - Breather Cap *	1	792173
61N	O-Ring - Oil Pump Shaft *	1	792174
63C	Capscrew - Hex Hd	6	793116
63E	Capscrew - Hex Hd	4	793158
63U	Capscrew - Hex Hd	6	792093
73A	Pipe Plug	1	792166

* Included in Gasket Sets

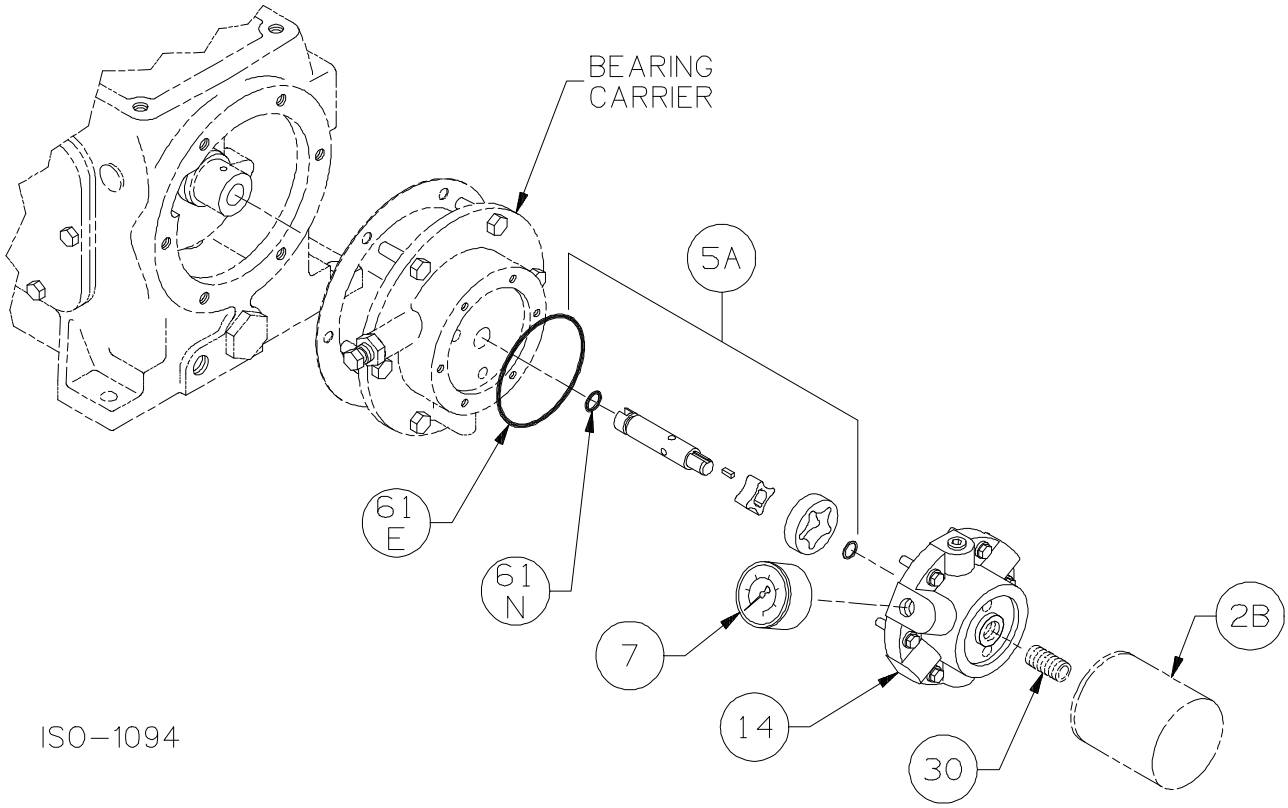

Oil Pump Detail:
Models HD161A, HD162A, HD172A,
HD361A, HD362A, HD363A, HD372A, HD373A, HDL372A,
HD601A, HD602A, HD603A, HD612A, HDL612A ISO1094

Ref	Description	Qty	Part No
2B	Oil Filter	1	790003
5A	Oil Pump Kit (w/ 61E, 61N)		
	160, 170, 360 & 370 Series	1	798855
	600 & 610 Series	1	798856
7	Oil Pressure Gauge	1	790012
14	Oil Pump Cover	1	792181
	Oil Pump Cover - For Filter		790001
30	Oil Filter Fitting	1	790002
61E	O-Ring - Oil Pump Cover *	1	792186
61N	O-Ring - Oil Pump Shaft *	1	792174

* Included in Gasket Sets

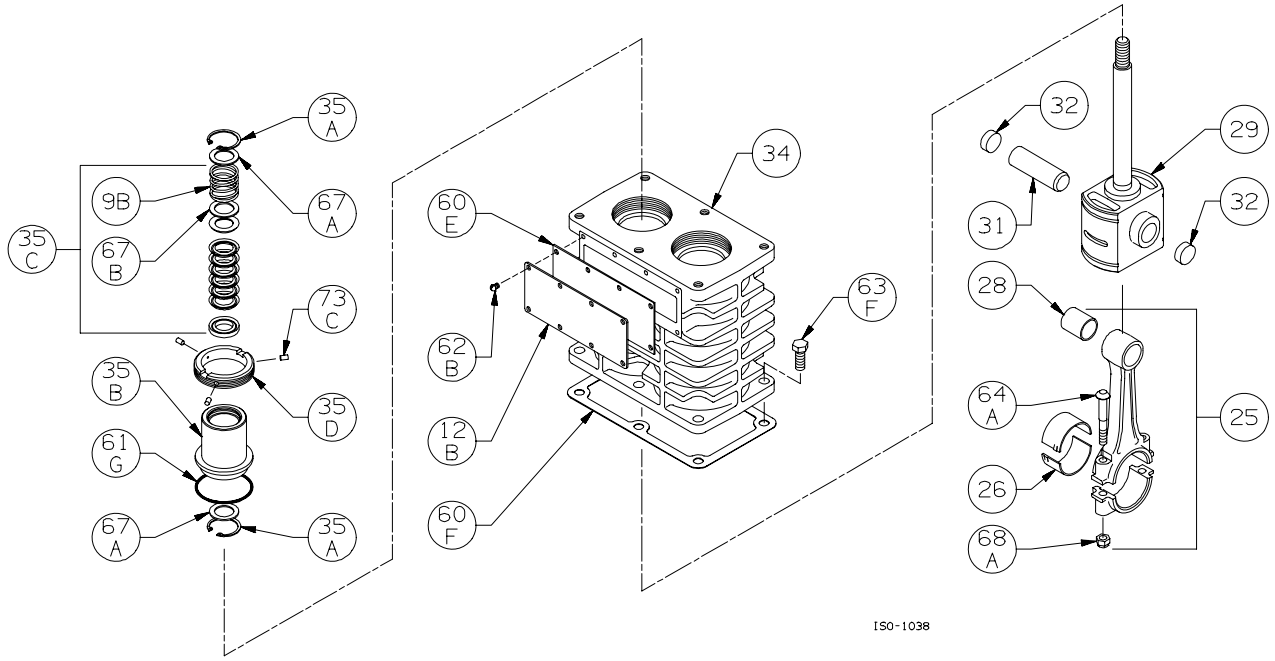

Crosshead Assembly: Models HD161A, HD161B

ISO1038

Ref	Description	Qty	Part No
9B	Packing Spring	2	792077
12B	Inspection Plate	1	792017
25	Connecting Rod Assembly	2	792009
26	Connecting Rod Bearing	2	792012
28	Wrist Pin Bushing **	2	792013
29	Crosshead Assembly	2	792029
31	Wrist Pin	2	792014
32	Wrist Pin Plug	4	792178
34	Crosshead Guide	1	792091
35A	Retainer Ring	4	792088
35B	Packing Box	2	793221
	Packing Box TNT-12		792809
35C	Packing Set	2	793510
35D	Hold-down Ring	2	793220
	Hold-down Ring TNT-12		792810

Ref	Description	Qty	Part No
60E	Gasket - Inspection Plate *	1	792092
60F	Gasket - Crankcase *	1	792121
61G	O-Ring (Buna-N) Std *	2	792125
	O-Ring (FKM) *		793213
	O-Ring (PTFE) *		793211
	O-Ring (Neoprene) *		793215
	O-Ring (Ethylene Propylene) *		793207
62B	Machine Screw - Inspection Plate	8	793096
63F	Capscrew - Hex Hd	6	792093
64A	Connecting Rod Bolt	4	792006
67A	Washer - Packing Box	4	792083
67B	Washer - Packing Spring	2	792087
68A	Connecting Rod Bolt Nut	4	792005
73C	Lock Plug *	6	792030

* Included in Gasket Sets

** Must be honed after installing

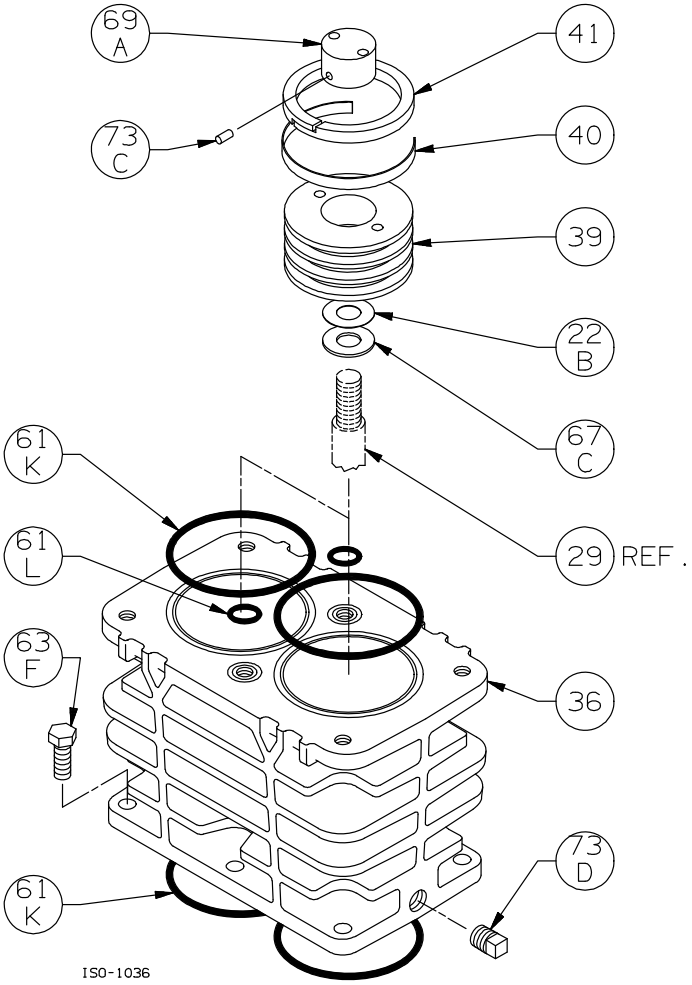

Cylinder Assembly:
Models HD161A, HD161B, HD161C, HD162B, HD162C, HD163B, HD163C

ISO1036

Ref	Description	Qty	Part No
22B	Piston Shim - 0.015	AR	792034
	Piston Shim - 0.007	AR	792050
36	Cylinder	1	792101
	Cylinder TNT-12		792801
39	Piston	2	792431
	Piston TNT-12		792807
40	Expander	6	794615
41	Piston Ring – Glass/Moly Filled, Std	6	792420
	Piston Ring - Poly Filled		792421
61K	O-Ring (Buna-N) Std *	4	792112
	O-Ring (FKM) *		792213
	O-Ring (PTFE) *		792210
	O-Ring (Neoprene) *		792110
	O-Ring (Ethylene Propylene) *		792206

Ref	Description	Qty	Part No
61L	O-Ring (Buna-N) Std *	2	792114
	O-Ring (FKM) *		792212
	O-Ring (PTFE) *		792211
	O-Ring (Neoprene) *		792118
	O-Ring (Ethylene Propylene) *		792207
63F	Capscrew - Hex Hd	6	792093
67C	Thrust Washer	2	792033
69A	Piston Nut	2	793022
	Piston Nut TNT-12		792808
73C	Lock Plug *	4	793028
73D	Pipe Plug	1	793498

* Included in Gasket Sets

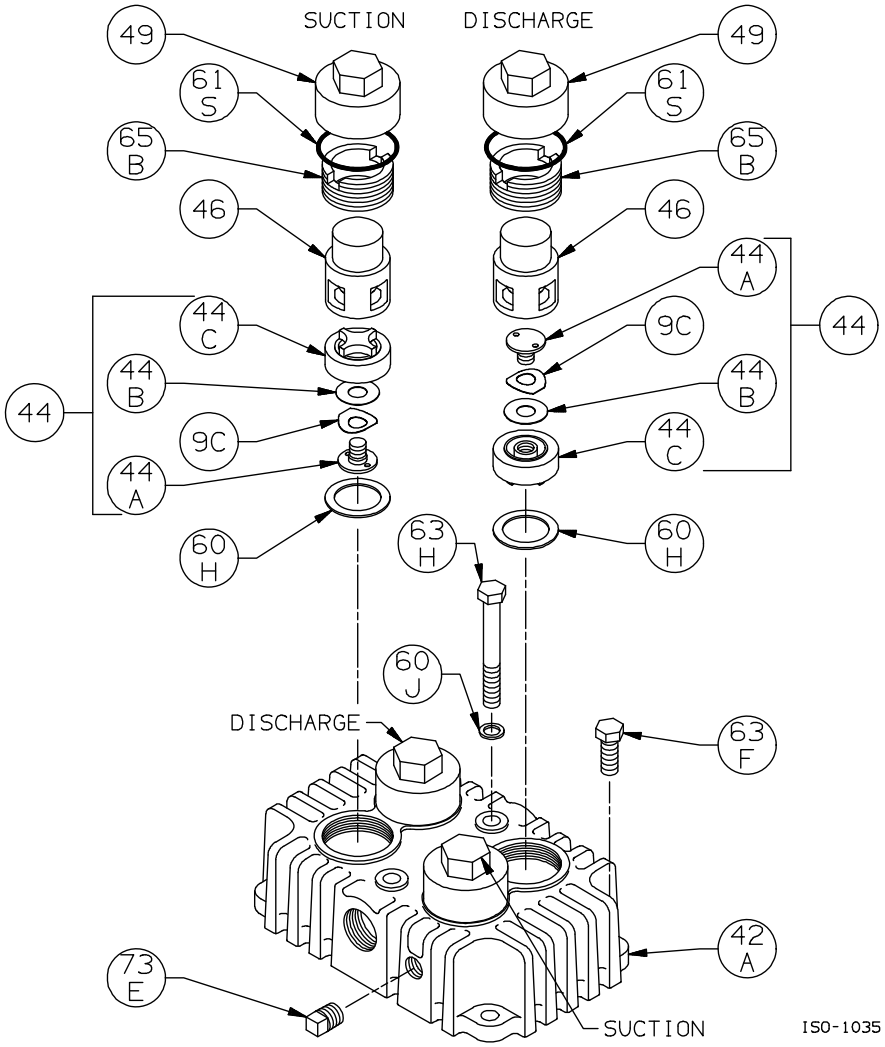

Head Assembly:
Models HD161A, HD161B, HD161C, HD162A, HD162B, HD162C, HD163B, HD163C ISO1035

Ref	Description	Qty	Part No
9C	Valve Spring	4	792038
42A	Head	1	792111
	Head TNT-12		792800
44	Valve Assembly	4	792056
44A	Valve Bumper	4	792054
44B	Valve Disc	4	792037
44C	Valve Body	4	792055
46	Cage	4	792051
	Cage TNT-12		792803
49	Valve Cap	4	792003
	Valve Cap TNT-12		792804
60H	Gasket - Valve *	4	792201
60J	Gasket - Center Head Bolt *	2	792203

Ref	Description	Qty	Part No
61S	O-Ring (Buna-N) Std *	4	792306
	O-Ring (FKM) *		792308
	O-Ring (PTFE) *		792307
	O-Ring (Neoprene) *		792309
	O-Ring (Ethylene Propylene) *		792310
63F	Capscrew - Hex Hd	4	792093
63H	Capscrew - Hex Hd	2	792095
	Capscrew - Hex Hd TNT-12		792805
65B	Valve Holddown Screw	4	792002
	Valve Holddown Screw TNT-12		792806
73E	Pipe Plug	2	793498

* Included in Gasket Sets

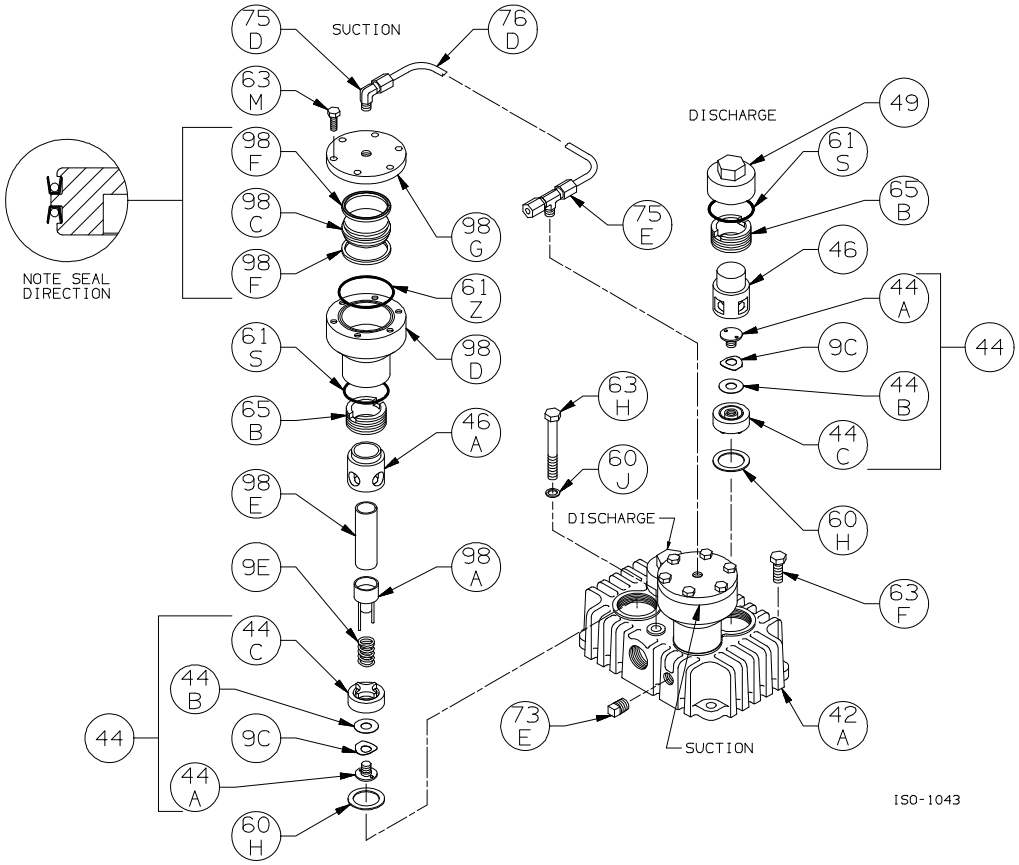

Head Assembly with Unloaders:
Models HD161A, HD161B, HD161C, HD162A, HD162B, HD162C, HD163B, HD163C ISO1043

Ref	Description	Qty	Part No
9C	Valve Spring	4	792038
9E	Unloader Spring	2	793293
42A	Head	1	792111
	Head TNT-12		792800
44	Valve Assembly	4	792056
44A	Valve Bumper	4	792054
44B	Valve Disc	4	792037
44C	Valve Body	4	792055
46	Cage	2	792051
	Cage TNT-12		792803
46A	Cage	2	792282
49	Valve Cap	2	792003
	Valve Cap TNT-12		792804
60H	Gasket - Valve *	4	792201
60J	Gasket - Center Head Bolt *	2	792203
61S	O-Ring (Buna-N) Std *	4	792306
	O-Ring (FKM) *		792308
	O-Ring (PTFE) *		792307
	O-Ring (Neoprene) *		792309
	O-Ring (Ethylene Propylene) *		792310

Ref	Description	Qty	Part No
61Z	O-Ring (Buna-N) Std *	2	792311
	O-Ring (FKM) *		792313
	O-Ring (PTFE) *		792312
	O-Ring (Neoprene) *		792314
	O-Ring (Ethylene Propylene) *		792320
63F	Capscrew - Hex Hd	4	792093
63H	Capscrew - Hex Hd	2	792095
	Capscrew - Hex Hd TNT-12		792805
63M	Capscrew - Hex Hd	12	790053
65B	Valve Holddown Screw	4	792002
	Valve Holddown Screw TNT-12		792806
73E	Pipe Plug	2	793498
75D	Tube Elbow	1	790355
75E	Tube Tee	1	790356
76D	Tube	1	790192
98A	Actuator Assembly	2	792296
98C	Unloader Piston	2	793288
98D	Unloader Body	2	792286
98E	Unloader Plunger	2	793290
98F	Unloader Seal	4	792284
98G	Unloader Cap	2	793287

* Included in Gasket Sets

Suggested Spare Parts for HD161A Compressors:

Part #	Description	Qty./ Unit	Comm. Qty.	Spare Qty.
792098 792209 792219 792097 792199	Gasket Set - Buna-N Gasket Set - PTFE * Gasket Set - FKM * Gasket Set - Neoprene * Gasket Set - Ethylene Propylene *	1	1	1
792056	Suction Valve	2		2
792056	Discharge Valve	2		2
792284	Unloader Seal *	4		4
792420 792421	Piston Ring - Standard Piston Ring - Poly Filled *	6	6	6
794615	Piston Ring Expander	6	6	6
793510	Packing Set	2	2	2
790003	Oil Filter *	1		6
792014	Wrist Pin	2		2
792013	Wrist Pin Bushing	2	2	2
792012	Conrod Bearing	2	2	2
The following parts would normally be required only for major compressor overhaul.				
792127	Inboard Bearing Cone	1		1
792126	Inboard Bearing Cup	1		1
792142	Outboard Bearing Cone	1		1
792138	Outboard Bearing Cup	1		1
792029	Crosshead Assembly	2		1
792009	Conrod Assembly	2		1
798855	Oil Pump Repair Kit	1		
792159 792169	Crankshaft Assembly Extended Crankshaft Assembly *	1		
792133	Bearing Adjustment Shim Kit	1		
792101 792801	Cylinder Cylinder, TNT-12 PTFE / Nickel Treated *	1		

* Optional Equipment on New Compressors