SPECIFICATION SHEET
PUMP MODEL MICRO C500

SLC050.03
Effective 07.08.12
Replaces 05.01.10

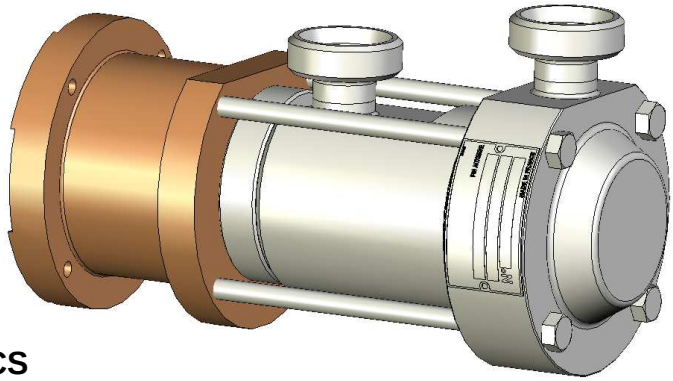

CHARACTERISTICS

		STANDARD	AVAILABLE OPTIONS
Technology		Eccentric Disc Mouvex®	
Maximum Flow rate at 1 cSt L/h (GPM)		500 (2.20)	
Cubic capacity L (cu.in)		0,0090 (0,5468)	
Inlet chamber volume L (cu.in)		0,15 (9,15)	
Outlet chamber volume L (cu.in)		0,08 (4,89)	
Ports		DIN20 (DIN 11851)	CLAMP DN20 (DIN 32876)
			1/2" BSP
			1/2" NPT
			SMS25 (SMS 1145)
			CLAMP ISO25 (ISO 2852)
			CSF DN20 (Connect S)
			BS4825-5 DN20 (RJT)
Motor Flange		IEC FT100-B34	NEMA143, Foot bracket
Dimensions mm (in.) (1)	**A**	242.5 (9.55)	
	B	138 (5.43)	
	C	116 (4.57)	
	D	61 (2.39)	
	E	96 (3.78)	
	F	30.5 (1.20)	
	G	80 (3.15)	
Weight kg (lbs)		8 (17.7)	

(1) Valid with NPT, BSP or DIN connections. For other connections types, consult us.

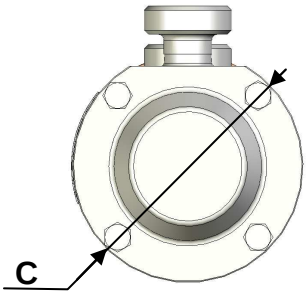

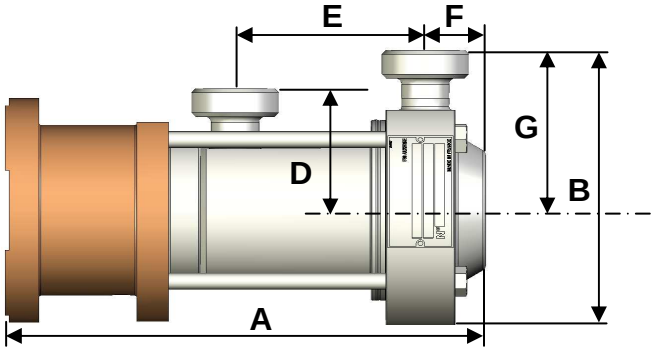

Z.I Plaine des Isles – 2 Rue des Caillottes F-89000 Auxerre France
www.mouvex.com

Non-contractual document. Mouvex may modify the products described in this document without prior notice.

SPECIFICATION SHEET
PUMP MODEL MICRO C500

SLC050.03
Effective 07.08.12
Replaces 05.01.10

OPERATING LIMITS

	STANDARD MATERIALS
Minimum temperature ℃ (℉)	-15 (5)
Maximum temperature ℃ (℉)	Process: 110 (230) Washing / Rinsing / Sterilization : 121 (250)
Maximum viscosity cSt (SSU)	2000 (9270)
Maximum differential pressure bar (psi)	5 (92)
Maximum inlet pressure barg (psig)	Process 1 (14.5) Cleaning 2 (29)
Maximum speed rpm	1000
Maximum solid particle size mm (in)	0.4 (0.015)
Maximum soft particle size mm (in)	0.8 (0.030)

MATERIALS OF CONSTRUCTION

Part No	PART NAME	STANDARD MATERIALS	AVAILABLE OPTIONS
100	Inlet Tube	316L Stainless Steel (low carbon)	
201	Cylinder	316L Stainless Steel (low carbon)	
301	Disc	CY5SnBiM (anti galling alloy)	
309	Disc Nut	316Ti Stainless Steel (Titanium Alloy)	
400	Outlet Cover	316L Stainless Steel (low carbon)	
415	Bolts	316L Stainless Steel (low carbon)	
781	Adaptor Flange	Cast iron	
782	Screws	Steel	
596	**Transmission Assembly**		
	Bearings	Ball / Roller / Needle	
	Bellows Assembly	316Ti & 316 L Stainless Fabrication	
	Housing	Stainless steel	
	Screws	Steel	
	Transmission Lubricant	Greased for life bearings	
	Seal Rings	Fluorocarbon (FKM) O-Rings	PTFE Encapsulated O-rings

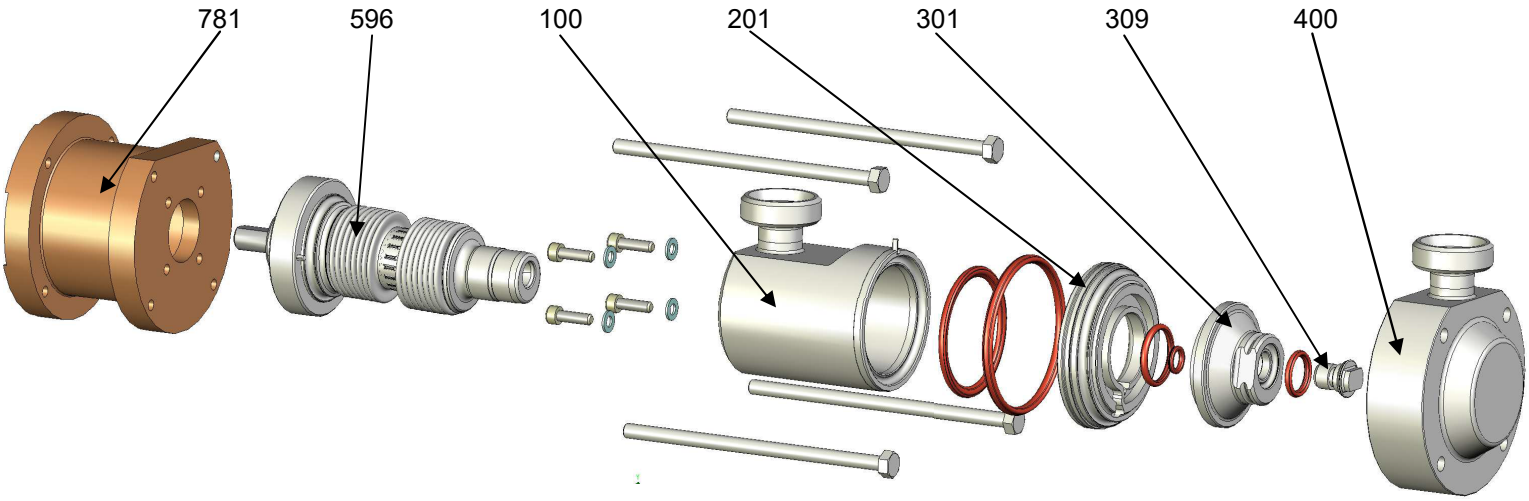

Дистрибутор:
България, София 1528, ул."Поручик Неделчо Бончев" 3, ет.5
+359 2 973 27 67, +359 2 973 2370; office_bg@opwmarket.com