MOUVEX BLACKMER A DOVER COMPANY

INSTRUCTIONS 1003-L00 e

Section	1003
Effective	October 2010
Replaces	September 2008

Original instructions

AR PUMP

Construction O

INSTALLATION

OPERATION

MAINTENANCE

OPW market

Дистрибутор:
България, София 1528, ул."Поручик Неделчо Бончев" 3, ет.5
+359 2 973 27 67, +359 2 973 2370; office_bg@opwmarket.com

ECCENTRIC PISTON PUMP
MOUVEX PRINCIPLE
SAFETY, STORAGE, INSTALLATION AND MAINTENANCE INSTRUCTIONS
MODEL : AR O

USED PRESSURE UNITS

Unit without suffix :
Differential pressure, for example, pressure difference between equipment suction and discharge.

Unit with suffix "a" :
Absolute pressure.

Unit with suffix "g" :
Gauge pressure, given regarding to atmospheric pressure (~101325 Pa, taken at 1 bar / 14,5 psi in this IOM).

Example :
P_{suc} = -0,2 barg = 0,8 bara
P_{dis} = 8,8 barg = 9,8 bara
ΔP = P_{dis} - P_{suc} = 9 bar

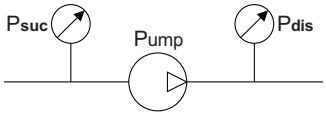

TECHNICAL CHARACTERISTICS

- Construction : Cast iron and steel
- Maximum suction pressure : less than 2 barg
- Acceptable maximal differential pressure : 5 bar
- Maximum pressure jacket : 8 barg
- Maximum pump speed : 410 rpm
- Maximum operating temperature :
  * 150°C with FKM seals
- Cylinder capacity : 2,533 litre

SAFETY INFORMATIONS

This is a SAFETY ALERT SYMBOL
When you see this symbol on the product, or in the manual, look for one of the following signal words and be alert to the potential for personal injury, death or major property damage.

DANGER
Warns of hazards that WILL cause serious personal injury, death or major property damage

WARNING
Warns of hazards that CAN cause serious personal injury, death or major property damage.

CAUTION
Warns of hazards that CAN cause personal injury or property damage.

NOTICE
Indicates special instructions which are very important and must be followed.

TABLE OF CONTENTS — *Page*

1. OVERALL DIMENSIONS 3

2. INSTALLATION 4
2.1 Choice of pump 4
2.2 Piping diameters 4
2.3 Piping assembly 4
2.4 Direction of rotation 4
2.5 Single bypass 5
2.6 Double bypass 5
2.7 Cleaning 5
2.8 Anchoring the pump units 5
2.9 Alignment of motor / pump and reduction gearbox / pump shafts 5
2.10 Electric motors 6
2.11 Diesel engine drive 6

3. USE 7
3.1 Storage 7
3.2 Pumping hot products 7
3.3 Pump with heating jacket 7
3.4 Pump filled with product at shutdown 7
3.5 Starting-up the pump 7
3.6 Shutting down the pump 7
3.7 Scrapping 7

4. OPENING THE PUMP TO INSPECT THE CYLINDER/ PISTON AND BUSHINGS 8
4.1 Necessary tools 9
4.2 Removing the front cover 9
4.3 Removing the piston and cylinder 9
4.4 Assembly of the cylinder, piston and front cover 9

5. MECHANICAL SEALS 10
5.1 Operation 10
5.2 Dismantling 10
5.3 Assembly 11

6. BYPASS 12
6.1 Operation 12
6.2 Orientation 12
6.3 Inversion 13
6.4 Adjustment 13
6.5 Obtaining the flow 14
6.6 Energy consumption 14

7. MAINTENANCE 14
7.1 Greasing 14
7.2 Checking of parts 14

8. DRILLED PISTON PUMP 15

9. PUMP WITH JACKET 15

10. TROUBLESHOOTING 16

11. CERTIFICATE OF CONFORMITY 19

1. OVERALL DIMENSIONS

Weight : 150 kg

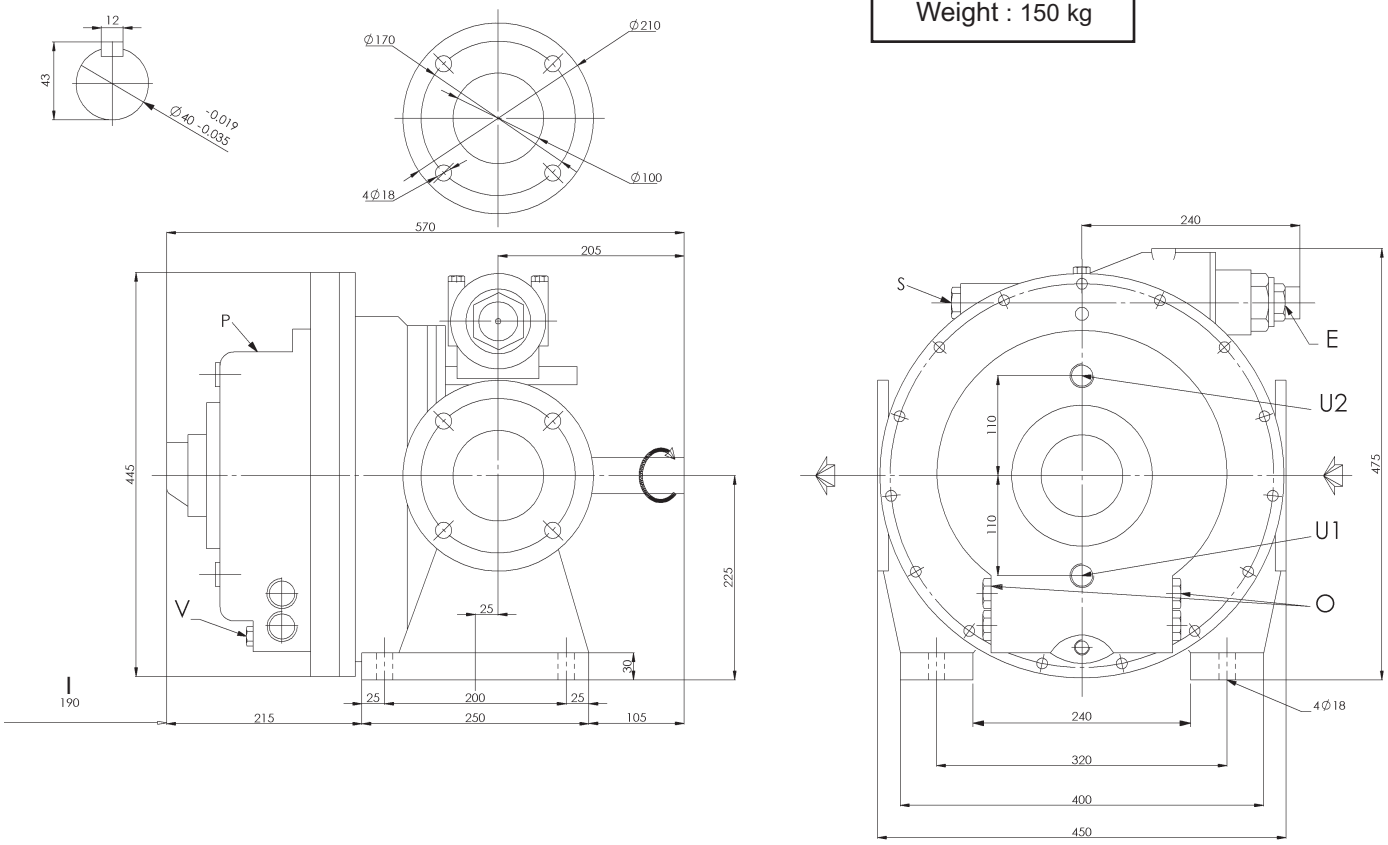

E	Bypass valve.
I	Space required for removing front cover.
O	Draining port for heating jacket 4 threaded holes G1” B.S.P.
P	Pump plate.
S	Mounting point for probe : M6 - threaded width : max. 8 mm.
U1	Inlet/outlet depending of heating fluid 2 threaded holes G3/4" B.S.P.
U2	
V	Pump drain G3/8” B.S.P.

Connection of heating jacket

Heating fluid :

Steam :
- Inlet U2
- Outlet U1

Heating liquid :
- Inlet U1
- Outlet U2

Lifting points

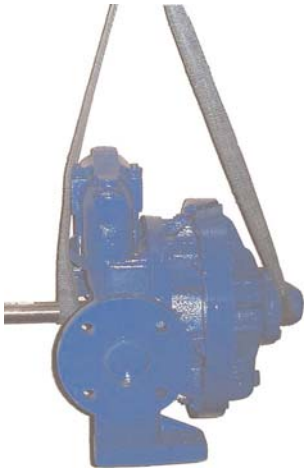

Noise level

The sound level of a pump is greatly influenced by its conditions of use. Cavitation and pumping products with high gas contents generally increases the sound level.

Under the following pumping conditions :
- excluding cavitation
- discharge pressure : 5 bar
- speed of rotation 410 rpm
- product viscosity of 1 cSt

The sound level reached for the AR pump in good conditions (ignoring the motor and gearbox noise) is less than 83 dB(A).

2. INSTALLATION

2.1 Choice of pump

To obtain the service expected from a MOUVEX pump, regarding both performance and longevity, it is vital that the type of pump, its speed and the materials used for its construction are determined as a function of the pump output, its installation and operating conditions.

You can contact our Technical Services at any time to ask for the information you require.

2.2 Piping diameters

The location of the pump in the transfer or recycling circuit should always be determined so as to reduce the suction height and length of the piping as much as possible.

The diameter of the pipes must be determined as a function of their length on the one hand, and the flow and viscosity of the product on the other, so that head loss remains within design limits. Therefore it is difficult to give general and precise directions.

However, we recall that it is never prejudicial to plan for wide piping diameters, particularly regarding the intake.

For the discharge, it is also possible to plan for a diameter equal to that of the pump's orifices, and on the intake, for a wider diameter if suction is very strong. In the case of viscous products, the determination of this diameter is very important since the variation of head loss is proportional to the viscosity and inversely proportional to the power of 4th of the diameter. Therefore a small reduction of piping diameter can have major consequences. Our Technical Services are always available to provide you with precise data if you give them accurate information or, better still, the installation plans.

2.3 Piping assembly

⚠ WARNING

Hazardous pressure can cause personal injury or property damage.

FAILURE TO RELIEVE THE SYSTEM PRESSURE PRIOR TO PERFORMING ANY WORK ON THE PUMP OR THE INSTALLATION CAN CAUSE PERSONAL INJURY OR PROPERTY DAMAGE.

Wherever possible, siphons and reverse slopes in the suction piping must be avoided and all the gaskets must be installed with great care to avoid air from entering the piping.

The elbows must always have a large radius and must not be assembled too close to the pump flanges, at the inlet as well as the outlet side.

A straight pipe 5 diameters is recommended between the pump flange and any pipe fitting (elbow, valve…).

The stresses exerted by the piping on the pump can deform the pump parts, increase wear, misalign the bearings and even cause parts to break.

The pipes must be designed to allow thermal expansion and contraction and be firmly secured (the use of flexible hoses and expansion loops is recommended).

We recommend placing isolating valves close to the pump flanges to permit dismantling and replacement without having to drain the installation. These valves should have the same diameter as the pipes and, by preference, be a full bore model.

A strainer should be fitted in the suction line to prevent the introduction of foreign bodies into the pump.

Before installing the new piping and tanks, clean them carefully to remove welding waste, rust, etc., which when carried by the liquid may damage the pump.

If the liquid may freeze or solidify, prepare for draining the piping by installing drain taps at the low points and air vents at the high points.

In the case of a very high intake or if you wish to prevent the piping from emptying at shutdown, you can install a foot valve. It should have a large diameter so as not to generate additional head loss.

Connection of heating jacket :
See § OVERALL DIMENSIONS.

2.4 Direction of rotation

⚠ WARNING

Hazardous pressure can cause personal injury or property damage.

FAILURE TO RELIEVE THE SYSTEM PRESSURE PRIOR TO PERFORMING ANY WORK ON THE PUMP OR THE INSTALLATION CAN CAUSE PERSONAL INJURY OR PROPERTY DAMAGE.

The MOUVEX pump is reversible; this allows it to always circulate the liquid in the desired direction by choosing the corresponding direction of rotation.

The intake and discharge sides are determined as follows :

When an observer faces the shaft, if rotation takes place clockwise, the intake is on the left; on the contrary if the rotation is anticlockwise, the intake is on the right.

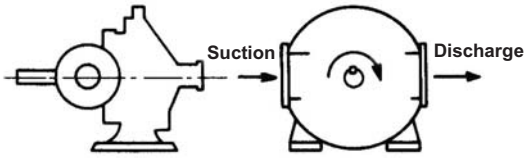

Figure A - Clockwise rotation

2.5 Single bypass

⚠ WARNING

Hazardous pressure can cause personal injury or property damage.

FAILURE TO RELIEVE THE SYSTEM PRESSURE PRIOR TO PERFORMING ANY WORK ON THE PUMP OR THE INSTALLATION CAN CAUSE PERSONAL INJURY OR PROPERTY DAMAGE.

The single bypass protects only the pump in only one direction, but it is reversible. Cap A must be on the intake side. This must be done before the pump is started for the first time and revalidated if the pumping circuit changes.

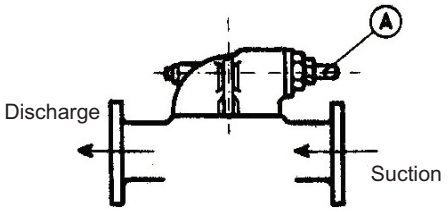

⚠ WARNING

Hazardous or toxic fluids can cause serious injury.

IF PUMPING HAZARDOUS OR TOXIC FLUIDS, THE SYSTEM MUST BE FLUSHED PRIOR TO PERFORMING ANY SERVICE OPERATION.

Once the pump is drained, the single bypass can easily be changed to the correct direction by dismantling the screws of the fastening pins and by turning the bypass 180° : before locking it in its new position, make sure that you carefully install the seals beneath it.

2.6 Double bypass

Pumps equipped with a double bypass are intended to operate in both directions in perfect safety.

However, this means substantial reserves for the maintenance of drive parts.

Changing the direction of rotation should only be done after completely shutting down the pump.

2.7 Cleaning

Since the pumps are delivered well greased, they must be cleaned before starting them up (especially when transferring food products, for example).

Cleaning can be done either by circulating an appropriate liquid, or by removing the front cover of the pump and carefully cleaning the internal parts (cf. § OPENING THE PUMP).

2.8 Anchoring the pump units

The correct seating of the pump is vital for its efficient operation and its longevity.

The surface must be resistant enough to absorb the stresses due to the pump unit without deformation.

In the case where the unit is fastened by anchor lugs or bolts, it must be carefully wedged to prevent any deformation of the chassis when tightening the bolts. Deformation of the chassis will cause stress prejudicial to the pump and the drive device and put the coupling out of true, thereby causing vibrations, noise and premature wear. Care must be taken so that the chassis is clear of the ground, apart from the base plates.

The chassis is equipped with a ground connection that must be used.

We recommend leaving an unoccupied space of about 50 cm, on either end of the chassis, to permit access to the bolts fastening the pump, reduction gear and motor together.

2.9 Alignment of motor / pump and reduction gearbox / pump shafts

⚠ WARNING

Do not operate without guard in place.

OPERATION WITHOUT THE SHAFT PROTECTOR CAN CAUSE SERIOUS PERSONAL INJURY, MAJOR PROPERTY DAMAGE, OR DEATH.

⚠ WARNING

Dangerous voltage. Can cause injury and death.

DISCONNECT THE ELECTRICITY SUPPLY BEFORE ANY MAINTENANCE OPERATION.

The motor and pump shafts are perfectly aligned in the factory before shipment, but they must be checked and realigned after installation if necessary.

To check the alignment and coupling, use a set square to control the axial misalignment, and feeler gauges for angular misalignment.

The 3 figures below show the operation clearly.

Carry out a control on 4 points: At the top - at the bottom - on the left - on the right	
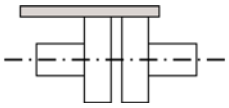	*Correct*
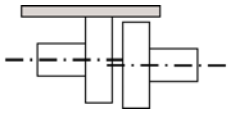	*Axial alignment out of true*
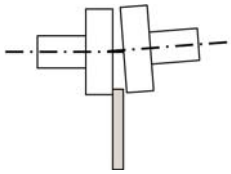	*Angular alignment out of true*

It is important to control the alignment at every step of installation in order to ensure that none of these steps generates stress on the pump unit or the pump itself :

- after fastening on foundations
- after fastening the piping
- after the pump has operated at normal operating temperature.

REMINDER :

Do not rely on the flexible coupling to compensate for misalignment.

2.10 Electric motors

⚠ WARNING

Dangerous voltage. Can cause injury and death.

DISCONNECT THE ELECTRICITY SUPPLY BEFORE ANY MAINTENANCE OPERATION.

Check that the supply voltage matches the indications on the motor rating plate.

Comply with the wiring diagram, make sure the wires are rated for the power and take care with the contacts which must be thoroughly tightened.

The motors must be protected by appropriate circuit breakers and fuses.

Connect the regulatory ground connections.

Check the direction of rotation :

⚠ WARNING

Do not operate without guard in place.

OPERATION WITHOUT THE SHAFT PROTECTOR CAN CAUSE SERIOUS PERSONAL INJURY, MAJOR PROPERTY DAMAGE, OR DEATH.

This fundamental checking of the pump must be done without any product, with the inlet and outlet circuit open to the air, for example, to avoid any risk of an unexpected pressure rise. Start the pump empty to check the correct operation of the connections and check that the direction of rotation corresponds to installation's inlet and outlet direction. Follow the instructions below if necessary to change the direction of rotation.

Three phase motor : switch any two wires or two phases of the current supply.

Two phase motor : switch the two wires of the same phase.

Single phase motor : comply with the instructions of the manual supplied with the motor.

2.11 Diesel engine drive

⚠ CAUTION

Excessive temperature- can cause injury or severe damage.

THE SURFACES CAN BE AT A TEMPERATURE LIABLE TO CAUSE INJURY OR SEVERE DAMAGE.

Do not forget that these engines are not reversible. It is therefore vital to carefully check the inlet and outlet sides of the pump before connecting the pump unit to the piping.

The use of diesel engines is now well known. Nevertheless, we strongly recommend that you carefully read the technical manuals concerning them.

3. USE

3.1 Storage

In the case of prolonged shutdown or storage, we recommend dismantling the pump and greasing it thoroughly. If it cannot be dismantled, it should be filled with oil via its orifices (inlet and outlet) and rotated slowly by hand to allow the oil to penetrate. The flange seal surfaces should be thoroughly greased to protect them against atmospheric oxidation.

3.2 Pumping hot products

CAUTION

Excessive temperature-can cause injury or severe damage.

THE SURFACES OF THE PUMP CAN BE AT A TEMPERATURE LIABLE TO CAUSE INJURY OR SEVERE DAMAGE.

When pumping products at high temperatures, take care when starting the pump for the fist time, tighten the bolts to compensate for expansion effects.

3.3 Pump with heating jacket

CAUTION

Excessive temperature-can cause injury or severe damage.

THE SURFACES OF THE PUMP CAN BE AT A TEMPERATURE LIABLE TO CAUSE INJURY OR SEVERE DAMAGE.

The circuit must be designed so that the expansion of the product in the pump can be absorbed via the piping. Therefore the product in the pipes must be heated before the product in the pump. Care must also be taken that the product being heated is not trapped between closed valves.

3.4 Pump filled with product at shutdown

WARNING

Hazardous pressure can cause personal injury or property damage.

FAILURE TO INSTALL ADEQUATELY SIZED PRESSURE RELIEF VALVE(S) CAN CAUSE PROPERTY DAMAGE, PERSONAL INJURY OR DEATH.

In the case where the pumping circuit is situated between isolating valves and/or has a check valve, you must bear in mind the variations in temperature that can occur, leading in particular to the expansion of the product in the circuit. In this case, provide a means of releasing the expansion volume.

The use of a relief valve can suffice for this function. The opening pressure of this valve must be compatible with the pressure allowed by the parts composing the circuit.

With products including particles that settle at shutdown, it is necessary to ensure that the consistency of the deposited products will not affect the start-up of the pump.

3.5 Starting-up the pump

WARNING

Hazardous pressure can cause personal injury or property damage.

FAILURE TO RELIEVE SYSTEM PRESSURE PRIOR TO PERFORMING PUMP SERVICE OR MAINTENANCE CAN CAUSE PERSONAL INJURY OR PROPERTY DAMAGE.

WARNING

Do not operate without guard in place.

OPERATION WITHOUT THE SHAFT PROTECTOR CAN CAUSE SERIOUS PERSONAL INJURY, MAJOR PROPERTY DAMAGE, OR DEATH.

Before starting up the pump, always ensure that the pumping conditions are correct, with the corresponding valves open, especially the inlet valve. For products requiring heating, they must be brought to their pumping temperature before starting the pump.

3.6 Shutting down the pump

When shutting down the pump, we recommend waiting for the pump to stop completely before closing the valves, especially the inlet valve.

3.7 Scrapping

The pump must be scrapped in compliance with the regulations in force.

During this operation, particular care must be paid to the drainage stages of the pump (pumped product).

4. OPENING THE PUMP TO INSPECT THE CYLINDER/PISTON AND BUSHINGS

Before opening the pump, always ensure that it has been drained and release the pressure it may contain.
Make sure the isolation valves, if any, are closed before pulling out the drain plug **434** and its seal **412**.

⚠ WARNING

Dangerous voltage. Can cause injury and death.

DISCONNECT THE ELECTRICITY SUPPLY BEFORE ANY MAINTENANCE OPERATION.

⚠ WARNING

Hazardous pressure can cause personal injury or property damage.

DISCONNECTING THE FLUID OR PRESSURE CONTAINMENT COMPONENTS DURING PUMP OPERATION CAN CAUSE SERIOUS PERSONAL INJURY, DEATH OR MAJOR PROPERTY DAMAGE.

⚠ WARNING

Hazardous pressure can cause personal injury or property damage.

FAILURE TO RELIEVE SYSTEM PRESSURE PRIOR TO PERFORMING PUMP SERVICE OR MAINTENANCE CAN CAUSE PERSONAL INJURY OR PROPERTY DAMAGE.

⚠ WARNING

Hazardous or toxic fluids can cause serious injury.

IF PUMPING HAZARDOUS OR TOXIC FLUIDS, THE SYSTEM MUST BE FLUSHED PRIOR TO PERFORMING ANY SERVICE OPERATION.

⚠ WARNING

The weight ot the parts can be dangerous and may provoke bodily injuries or material damages.

BE CAREFUL WITH THE WEIGHT OF THE PARTS WHEN THEY ARE BEING REMOVED.

⚠ CAUTION

Slippery lubricant. Spills should be cleaned up.

THE PUMP LUBRICANT IS VERY SLIPPERY AND MAY CAUSE SERIOUS INJURY. ANY SPILLS MUST BE CLEANED UP.

4. OPENING THE PUMP TO INSPECT THE CYLINDER/PISTON AND BUSHINGS (continued)

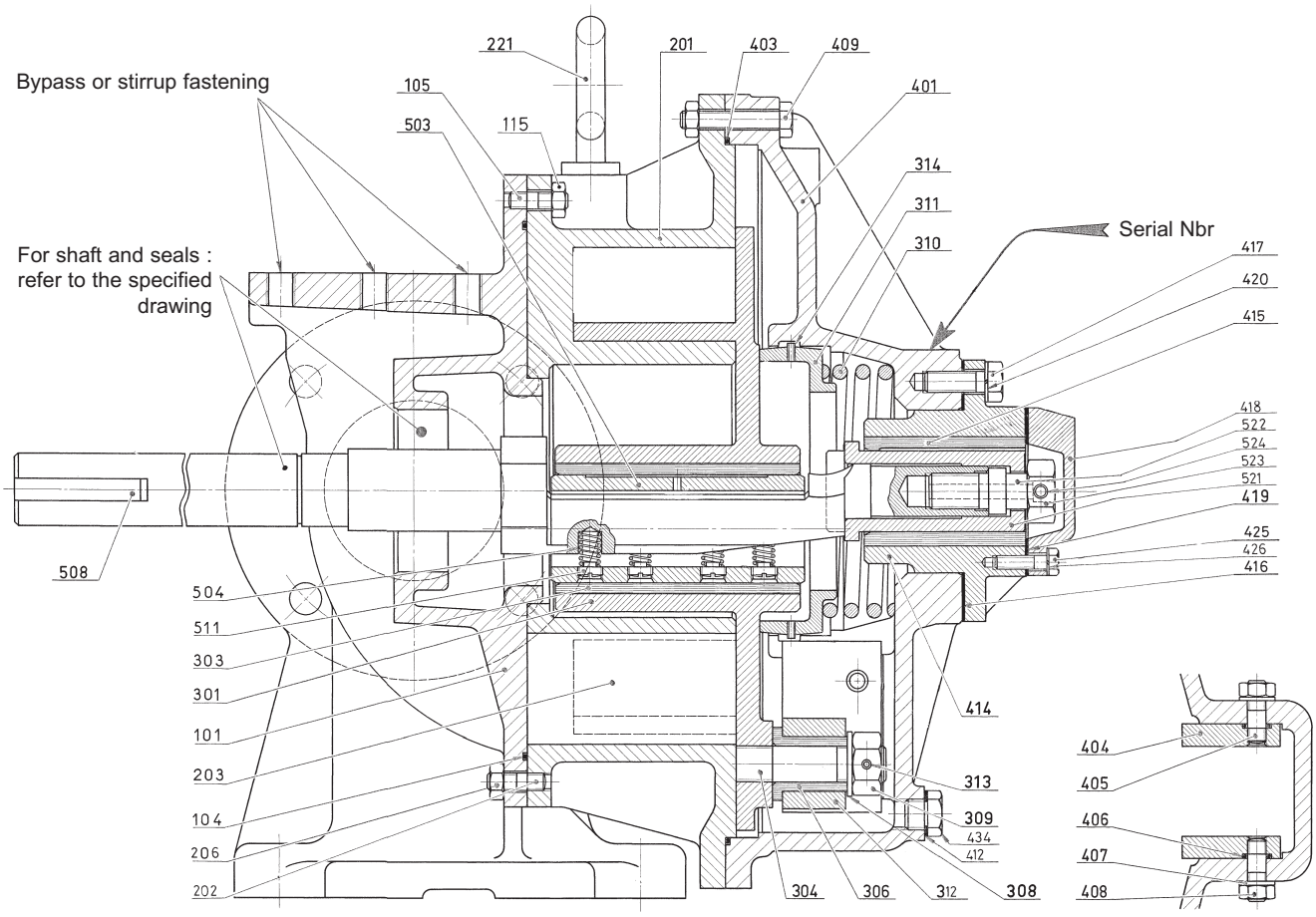

WARNING

The weight ot the parts can be dangerous and may provoke bodily injuries or material damages.

BE CAREFUL WITH THE WEIGHT OF THE PARTS WHEN THEY ARE BEING REMOVED.

4.1 Necessary tools

- 9 - 13 - 17 - 22 - 24 - 27 - 32 open-end spanner
- 16 - 19 socket spanner
- adjustable spanner
- 1 plastic mallet
- 1 flat screwdriver
- 1 tube for assembling the bearings

4.2 Removing the front cover

Unscrew the bolts **409** and nuts **409a** securing the front cover.

Remove the front cover **401** by progressively separating it from the pump body. Remove the seal **403** and check its condition. Be prepared to replace it if necessary. Check the condition of the bushing **415**. Be prepared to replace it if its eccentricity exceeds 1 mm.

4.3 Removing the piston and cylinder

Remove the sleeve **521** by using the nut **523** to release it.

Extract the piston **301** from the cylinder **201** (you may have to use a lever to separate the piston from the cylinder. Be very cautious not damaging the piston or the cylinder). Examine the condition of the piston **301** and replace it if the wear limits have been reached (see § MAINTENANCE). Examine the condition of the piston bushing **303** and replace it if its eccentricity exceeds 1.5 mm.

To dismantle the cylinder, remove the nuts **115**. Separate the cylinder from the main body **101** and remove the seal **104** to check its condition. Replace it if necessary. Examine the condition of the cylinder and replace it if its wear limits have been reached (see § MAINTENANCE).

The pumping characteristics demand a cylinder/piston with matching dimensions. Consequently, changing the cylinder or piston requires the replacement of both the cylinder and the piston.

4.4 Assembly of the cylinder, piston and front cover

Assembly is done in the reverse order to the dismantling.

5. MECHANICAL SEALS

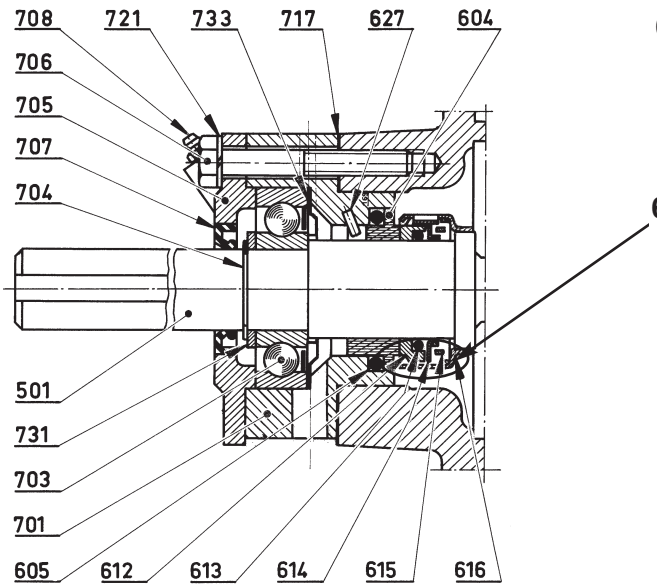

610 comprising : **604**
605

697 comprising : **612**
613
614
615
616

5.1 Operation

Shaft **501** drives the one piece rotating part **697** (including parts **612**, **613**, **614**, **615** and **616**) in a rotary motion. To do this, the rotating part is equipped with 2 lugs that fit into 2 grooves provided for this purpose on the shaft.

The stationary part **604** of the seal is fixed in the bearing cage **701** with an 'O' ring **605** and the stop pin **627**.

Sealing is done :

- on the shaft by the 'O' ring in the rotating seal part **613**,
- by the surfaces in contact between the rotating part **697** and the static matching part **604**.
- in the bore of the bearing cage **701** by the 'O' ring **605** tightened between the bearing cage and the fixed matching part **604**.

Sealing is therefore done as a function of the condition of these contact surfaces and the seals.

5.2 Dismantling

⚠ WARNING

Dangerous voltage. Can cause injury and death.

DISCONNECT THE ELECTRICITY SUPPLY BEFORE ANY MAINTENANCE OPERATION.

⚠ WARNING

Hazardous pressure can cause personal injury or property damage.

FAILURE TO RELIEVE SYSTEM PRESSURE PRIOR TO PERFORMING PUMP SERVICE OR MAINTENANCE CAN CAUSE PERSONAL INJURY OR PROPERTY DAMAGE.

⚠ WARNING

Hazardous pressure can cause personal injury or property damage.

DISCONNECTING THE FLUID OR PRESSURE CONTAINMENT COMPONENTS DURING PUMP OPERATION CAN CAUSE SERIOUS PERSONAL INJURY, DEATH OR MAJOR PROPERTY DAMAGE.

⚠ WARNING

Hazardous or toxic fluids can cause serious injury.

IF PUMPING HAZARDOUS OR TOXIC FLUIDS, THE SYSTEM MUST BE FLUSHED PRIOR TO PERFORMING ANY SERVICE OPERATION.

Before opening the pump, you must always drain it and release the pressure it may contain. Make sure that the isolation valves, if any, are closed or drain the installation before pulling out the drain plug **434** and its seal **412**.

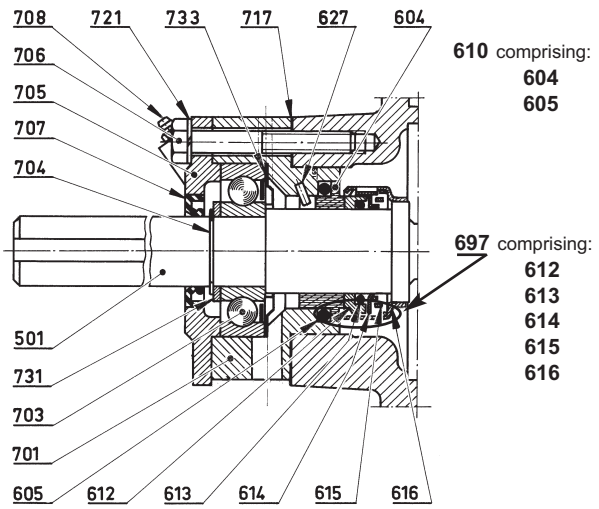

After opening the pump (see § 4.):

To remove a taper lock shaft coupling

1. Dismantle the coupling of the pump.
   For the standard coupling supplied by MOUVEX, loosen the hexagonal socket head screws, and by replacing one of them in the slot provided for this purpose to release the tapered lock bushing.
   For any other coupling, please refer to the supplier's instructions.
2. Remove the shaft key **508**.

To remove the bearing cover **705**

1. Unscrew the screws **706** and washers **721**.
2. Remove the bearing cover **705**.
3. Check the condition of the lip seal **707**.

To dismantle the front cover **401** of the pump (please consider also to § 4.1)

1. Loosen the bolts **409** and nuts **409a**.
2. Remove the front cover **401**.
3. Remove the seal **403** and check its condition.
   If the front cover does not easily separate, tap it lightly with a plastic mallet to separate it progressively.
4. Extract the piston **301** (please also consider § 4.2).

To dismantle the bearing **703**

1. Remove the circlip **704** using circlip pliers or a screwdriver, taking care not to damage it.
2. Remove the washer **731**.
3. Remove the shaft **501** from the bearing **703** by tapping it lightly with the plastic mallet on the drive side of the pump. Hold the shaft **501** firmly during dismantling.
4. Remove the protection circlip **733**.

To dismantle the bearing cage **701**

1. Separate the bearing cage **701** by tapping it with a plastic mallet.
2. Remove the bearing cage seal **717** and check its condition.

To dismantle the complete stationary part **610** of the mechanical seal

1. Remove the stationary part of the mechanical seal 604
2. Remove the 'O' ring **605** from the holder and check its condition.

To dismantle the rotating part **697**

1. Remove the rotating part **697** from the shaft **501**, taking care not to scratch it (especially in the case of FEP encapsulated 'O' rings. Check the condition of shaft surface, rub it down with emery paper No 320 if scratched).

5.3 Assembly

Assembly of the rotating part **697**

1. Mount the rotating part **697** on the shaft **501** (with the assembly cone for the FEP 'O' rings) taking care not to scratch the shaft (extremely important in the case of the assembly of FEP 'O' rings. Check the condition of the shaft surface, rub it down with emery paper No320 if scratched). Align the 2 lugs of the rotating part **697** with the 2 grooves on the shaft **501**.
2. Clean the seal surface on the rotating part with a soft cloth if it is dirty. Be careful not to scratch the surface of the seal.

To assemble the complete stationary part **610** of the mechanical seal

1. Clean the 'O' ring groove in the bearing cage **701**.
2. Locate the 'O' ring **605** in the bearing cage **701**.
3. Place the stationary part of the seal **604** in the bearing cage **701**, taking care to align the pin located in the rolling bearing cage **701** with the groove on the stationary part of the seal **604**.
4. Clean the surface of the seal with a soft cloth if it is dirty. Be careful not to scratch the surface of the seal.

Assembly of bearing **703**

1. Place the protection washer **733** in the bearing cage **701**.
2. Position the shaft **501** with the rotating part **697** in the bearing cage **701** with the washer **733**.
   Be careful not to knock the 2 surfaces of the seals.
3. Position the bearing **703** on the end of the shaft **501**. Tap the shaft lightly with a plastic mallet (NOT THE PUMP DRIVE END).
4. Place the shaft **501** drive end up in a vice, resting on the bearing cage **701**, and tap on the inside of the bearing **703** with the tube (the tube willl have an internal diameter slightly larger than the internal diameter of the ball bearing) and the plastic mallet until you see the circlip groove **704** on the shaft. Be careful not to damage the seal (tap lightly on the tube).
5. Assemble the washer **731** and the circlip **704** on the shaft **501**.

   NOTICE : We recommend the use of a hand press.

Remounting the piston **301**

Assembly of front cover **401**

1. Clean the seal housing **403** and mount the seal **403**.
2. Replace the front cover **401,** taking care that the piston guide block is well assembled in its housing taking care not to damage the seal **403**.
3. Tighten the bolts **409** with the nuts **409a**.

To assemble the rolling bearing cage **701**

1. Clean the cage seal **717**.
2. Assemble the cage seal **717** on the bearing cage **701**.
3. Position the shaft **501** in the pump.
4. Fill the bearing **703** with grease (see § MAINTENANCE).
5. Reassemble the cover **705**, grease the lip of the lip seal **707** to ease assembly.
6. Replace the screws **706** and their washers **721**.

6. BYPASS

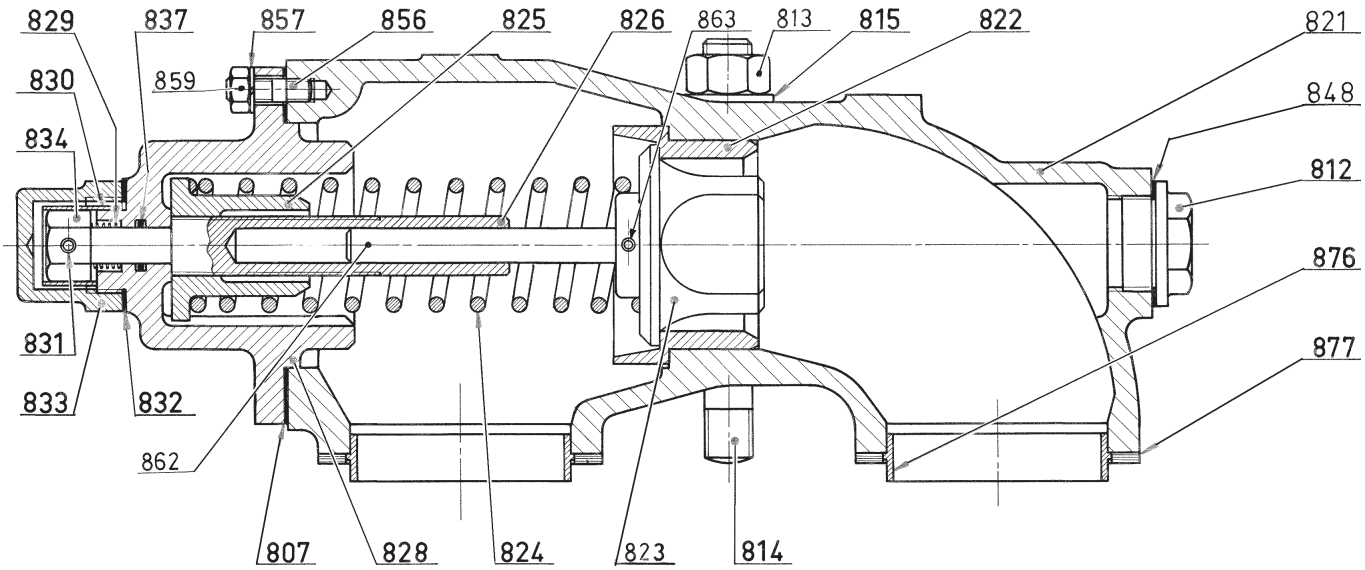

6.1 Operation

The compensated bypass operates like a safety valve, by automatically limiting the discharge pressure at the value for which it is adjusted.

When the discharge pressure reaches the adjusted pressure of the spring **824**, the valve **823** opens, thus permitting the partial or total return of the liquid to the inlet side of the pump.

The compensated bypass is used when the pump flow is frequently diverted through its bypass, i.e. when the discharge is closed, the compensated bypass is designed to generate a very small increase of pressure compared with the adjustment pressure, which means that the motor will economically supply the necessary additional power for specific working conditions. It should be noted that the role of the bypass, as a safety device, is limited to protecting the pump against accidental over-pressure.

For all electric motors - unless the model used can handle the increased load due to maximum overpressure - (pump sending its flow through the bypass with the spring tightened to the maximum) it is vital to provide appropriate overload protection.

The double bypass is composed of an assembly of two single bypasses in opposition. This protects the pump in both directions of rotation. Operation in each direction is the same as for a single bypass. Adjustment of this bypass requires adjustment for both directions of operation, refer to § 2.10 for the electric motors protection.

6.2 Orientation

The double bypass is designed to protect the pump in both directions, the single bypass only protects the pump in one direction of operation. Consequently it is necessary to check that the pumps direction of operation is correct by verifying that the cap **833** is located on the inlet side. The bypass must be reversed if in the wrong direction.

⚠ CAUTION

Slippery lubricant. Spills should be cleaned up.

THE PUMP LUBRICANT IS VERY SLIPPERY AND MAY CAUSE SERIOUS INJURY. ANY SPILLS MUST BE CLEANED UP.

⚠ WARNING

Hazardous pressure can cause personal injury or property damage.

FAILURE TO RELIEVE SYSTEM PRESSURE PRIOR TO PERFORMING PUMP SERVICE OR MAINTENANCE CAN CAUSE PERSONAL INJURY OR PROPERTY DAMAGE.

⚠ WARNING

Hazardous or toxic fluids can cause serious injury.

IF PUMPING HAZARDOUS OR TOXIC FLUIDS, THE SYSTEM MUST BE FLUSHED PRIOR TO PERFORMING ANY SERVICE OPERATION.

⚠ WARNING

Hazardous pressure can cause personal injury or property damage.

INCORRECT SETTINGS OF THE PRESSURE RELIEF VALVE CAN CAUSE PUMP COMPONENT FAILURE, PERSONAL INJURY, AND PROPERTY DAMAGE.

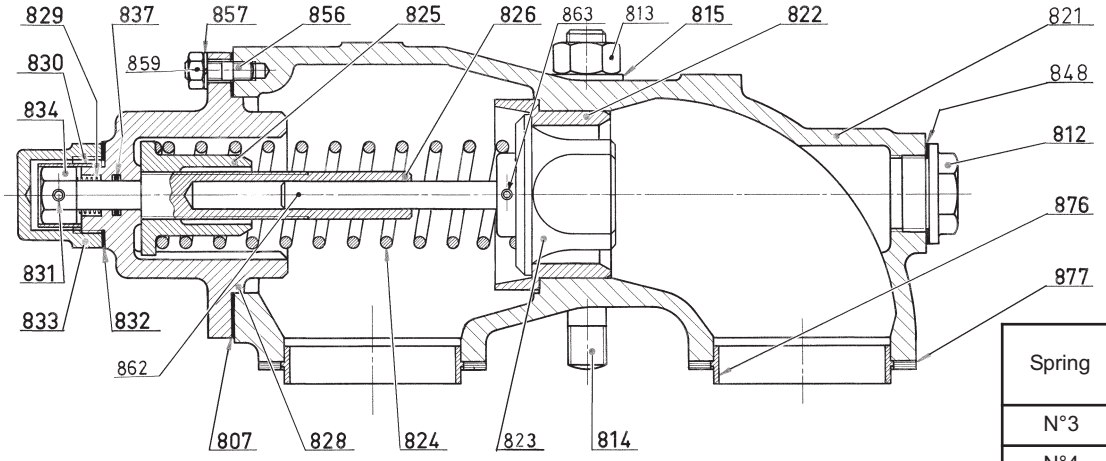

Spring	Loading (bar)	
	Mini	Maxi
N°3	1,7	3,2
N°4	1,9	5,4

6.3 Inversion

WARNING

The weight ot the parts can be dangerous and may provoke bodily injuries or material damages.

BE CAREFUL WITH THE WEIGHT OF THE PARTS WHEN THEY ARE BEING REMOVED.

WARNING

Hazardous pressure can cause personal injury or property damage.

FAILURE TO RELIEVE SYSTEM PRESSURE PRIOR TO PERFORMING PUMP SERVICE OR MAINTENANCE CAN CAUSE PERSONAL INJURY OR PROPERTY DAMAGE.

WARNING

Hazardous or toxic fluids can cause serious injury.

IF PUMPING HAZARDOUS OR TOXIC FLUIDS, THE SYSTEM MUST BE FLUSHED PRIOR TO PERFORMING ANY SERVICE OPERATION.

WARNING

Dangerous voltage. Can cause injury and death.

DISCONNECT THE ELECTRICITY SUPPLY BEFORE ANY MAINTENANCE OPERATION.

Before commencing work, make sure that the pump cannot be started up, even accidentally. Before opening the pump, it must be drained and relieved of any pressure it may contain. Take care to check that the isolation valves, if any, are closed before pulling out the drain plug **434** and its seal **412**.

To reverse the bypass, unscrew the nuts on the studs **813** and turn the bypass through 180°.

Before locking the bypass in its new position, check the condition of the seals **877** and their installation.

Tighten the nuts on the studs, taking care to balance the tightening so that the bypass remains vertical.

6.4 Adjustment

WARNING

Hazardous pressure can cause personal injury or property damage.

PUMPS OPERATING AGAINST A CLOSED VALVE CAN CAUSE SYSTEM FAILURE, PERSONAL INJURY AND PROPERTY DAMAGE.

To adjust the bypass, unscrew the cap **833** and its seal **832**, turn the adjustment nut **834** clockwise to increase the discharge pressure, and anticlockwise to decrease it. Once the adjustment is finished, do not forget to re-screw the cap **833** and its seal **832.**

Adjustment of the bypass is satisfactory when the flow meets the pumps requirements and when the motor bears the power increase due to the overpressure seen upon closing the discharge. This is how the bypasses of our pump units are adjusted, as a function of the information provided by our Technical Services.

The pumps supplied bare shaft are delivered with a standard bypass setting which needs to be adjusted with the exact working conditions and installation, as per the above described procedure.

6. BYPASS (continued)

6.5 Obtaining the flow

⚠ WARNING

Hazardous pressure can cause personal injury or property damage.

PUMPS OPERATING AGAINST A CLOSED VALVE CAN CAUSE SYSTEM FAILURE, PERSONAL INJURY AND PROPERTY DAMAGE.

Before carrying out any adjustments, make sure that there is a means of reading the pressure during adjustment and that the components of the circuit are rated for the adjustment pressure. The pressure must at no time exceed the pressure rating of the lowest rated component.

If the flow is lower than anticipated, the cause may be due to incorrect adjustment of the bypass valve.

To correct the flow, gradually tighten the adjustment nut **834** after making sure that the pump is running well at the recommended speed.

If during adjustment, you compress the spring to its limit or disturb the operation of the motor, without obtaining the flow required, this means that the pump unit must operate with a pressure higher than that for which it was designed. In this case you should consult our Technical Services.

When you obtain the required flow, make sure that the motor can withstand the increased power due to the overpressure created by closing off the discharge line.

6.6 Energy consumption

If the energy consumption does not correspond with expectations, the reason may be poor adjustment of the bypass valve.

If consumption is low and you do not get the required flow, close the discharge valve and tighten the adjustment nut until the correct power consumption level is reached. Then open the discharge valve as it was before adjustment.

If consumption is high, close the discharge piping and slacken the adjustment nut until the correct power consumption level is reached. Then open the discharge valve as it was before adjustment.

7. MAINTENANCE

7.1 Greasing

Except for special cases, the MOUVEX pump only requires lubrication of the shaft inlet bearing.

Use a grease for good quality ball bearings.

Lubrication must be done every 1,000 hours of operation or at least once a year.

The quantity of grease to be added must not exceed 30 cm^3.

For pumps operating at high temperatures (in principle from 100°C upwards) use a grease with a high drop point.

If the pump is equipped with a Stofer oiler, and when the type of product requires it, the pump must be greased before each start-up, after each shutdown and every 3 to 4 hours of continuous operation.

Preference should be given to lubricants insoluble in the product pumped and, in the case of hot products, lubricants that maintain good viscosity at the operating temperature.

The other elements of the pump unit (motor, reduction gear) should be maintained in conformity with their specific technical instructions.

7.2 Checking of parts

The piston **301** and the cylinder **201** are active parts (wearing parts). These parts must be replaced if the thickness measurements are lower than the following values :

- Piston (**301**) . . . . . 11,7 mm
- Cylinder (**201**) . . . .113,0 mm

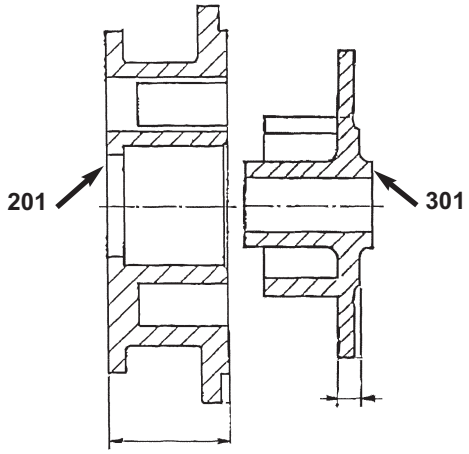

8. DRILLED PISTON PUMP

Drilling the piston permits the circulation of the product behind the piston and therefore avoids any "dead" zone.

It also helps to avoid any over-pressure problems related to the expansion of hot products.

All pumps with a heating jacket must be fitted with a drilled piston.

The piston is drilled with 2 holes (A) though only one remains open, **always on the inlet side** (the other is closed in the factory).

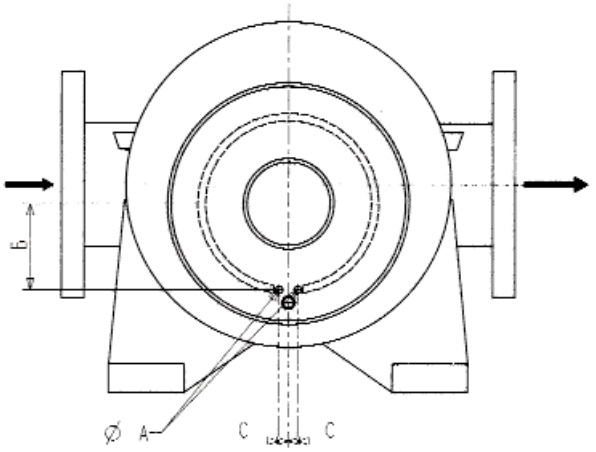

If the rotation direction of the pump requires the standard assembly to be changed, open the plugged hole by removing the screw and use the screw to close the other hole on the discharge side, with removable thread locker (typ Loctite® 243*).

The screw must be recessed from cylinder rubbing surface (1 mm).

For double bypass, remove the screw from the hole which will the more frequently be on the suction side.

Dimension and position of holes		
Ø A	C ± 0.2	B ± 0.2
M10	7,8	104

* Loctite® is a registered trademark.

9. PUMP WITH JACKET

CAUTION

Excessive temperature- can cause injury or severe damage.

THE SURFACES OF THE PUMP CAN BE AT A TEMPERATURE LIABLE TO CAUSE INJURY OR SEVERE DAMAGE.

WARNING

Hazardous pressure can cause personal injury or property damage.

PUMPS OPERATING AGAINST A CLOSED VALVE CAN CAUSE SYSTEM FAILURE, PERSONAL INJURY AND PROPERTY DAMAGE.

The jacketed front cover **461** permits the circulation of steam or liquid.

The plug **462** permits the draining of the heating jacket.

CAUTION :

When draining the heating jacket, make sure that the fluid in the jacket is not under pressure by venting the heating fluid line prior to draining the jacket.

When draining the heating fluid as it may be at an elevated temperature that can cause scalding and permanent injury or severe damage.

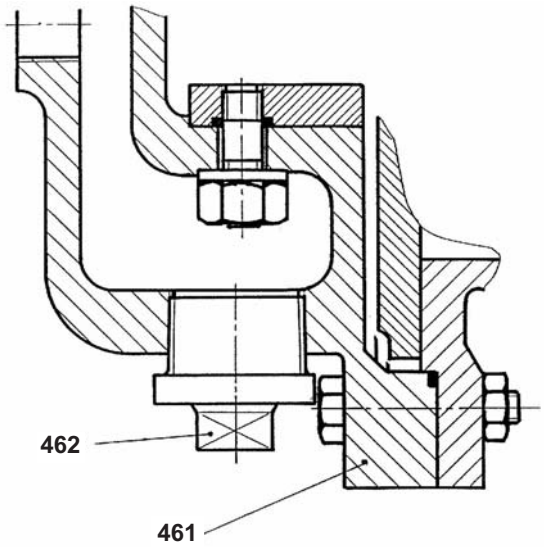

10. TROUBLESHOOTING

ZERO OR INSUFFICIENT FLOW			
1			**PRELIMINARY CHECKS**
	1-1		Make sure that the plastic plugs have been taken away from the ports of the pump and that the pump is running (defective drive, damaged motor, etc., faulty transmission : broken coupling, sliding belt, worn or poorly coupled clutch, etc.).
	1-2		Make sure that the pump rotates in the correct direction corresponding to the direction in which the liquid circulates in the installation (cf. the pump plate). If necessary, change the electric motor connections or adjust the piping as necessary (diesel engine drive).
	1-3		Make sure that there is liquid in the tank from which the pump draws and that the end of the inlet piping is constantly submerged.
	1-4		Make sure that the pump rotation speed is sufficient. Determine this by checking the speed of the pump motor (see motor plate) and the speed reduction ratio (see reduction gearbox plate) or use a rev. counter.
			If these checks do not highlight the problem :
2			**MEASURE THE DISCHARGE PRESSURE** (as close to the outlet of the pump as possible, with a minimum distance of 5 pipe diameters).
	2-1		If the pressure is lower than the figures given for the material, or null, this could be due to :
		2-1-1	A poorly adjusted bypass, the valve setting is lower than the discharge pressure (tighten the set screw or replace the spring after checking that the electric motor is suitably protected).
		2-1-2	The bypass valve is not closed ; either the plunger has not returned to its initial position, or there is dirt on the valve seat.
		2-1-3	The pump is worn, this will also affect the suction capacity of the pump (cf 3-2-2 c).
	2-2		If the pressure complies with the equipment data (pump speed and motor output) it is possible that :
		2-2-1	The pressure required for the given installation to obtain the required flow rate is too high and the flow is partially or totally circulating via the bypass, or : a. the height of the discharge is too great (reduce it by bringing the discharge tank to the level where the pump is). If suction conditions are favourable, the pump can also be moved closer to the discharge tank. b. that head losses are too high because : - the piping is unsuitable (too many "bends", too long or the diameter is too narrow) for the process conditions : Flowrate, Specific Gravity, Viscosity (this can change considerably with temperature). Reduce the head losses by simplifying the circuit : reduce of the number of fittings, valves, elbows, etc... Move the pump closer to the discharge tank or vice versa, if conditions permit. Increase the diameter of the piping, etc... Reduce the product viscosity via heating. Reduce the flow, etc... - of partially blocked piping (valve partially closed, tap partially shut, cloth obscuring flow, etc.).
		2-2-2	The discharge piping is completely blocked (valve fully closed, tap completely closed, cloth plugging flow, full protection seal left by carelessness, etc...), in this case, all the liquid passes via the bypass.

3			**MEASURING THE VACUUM PRESSURE** (as close as possible to the pump inlet, inlet side).
	3-1		If the vacuum is high, e.g. higher than or equal to 6 to 7 metres WC (0.6 to 0.7 bara i.e. about 45 or 50 cm of mercury), this can result in pump noise. The cause could be :
		3-1-1	a. the suction lift is too high (reduce it by taking the pump down closer to the level of the liquid) b. the dynamic suction losses are too high : 1. cf 2-2-1 b 2. the inlet piping orifice is too close to the bottom of the tank.
		3-1-2	The inlet piping is completely blocked (valve, tap, filter, cloth, full seal forgotten, etc.)
		3-1-3	The liquid vapour pressure is too high (or has become too high following, for example, a change of temperature). Bring the pump closer to the level of the liquid, install the pump closer to the feed or cool the liquid to reduce the vapour pressure.
	3-2		If the vacuum is low, for example, less than 3 metres WC (i.e. about 20 cm of mercury), check for leaks on the inlet pipe, isolate the pump from the inlet piping (by closing the valve nearest the pump or by inserting a full flange seal) and measuring the vacuum once again.
		3-2-1	If the vacuum is high with the isolating valve closed on suction line, e.g. higher than or equal to 6 or 7 metres WC (i.e. about 45 to 50 cm of mercury), the pump is not the cause : a. there must be an air inlet upstream of the pump isolating valve. b. the liquid vapour pressure is or has become too elevated due to a change of temperature (cf 3-1-3).
		3-2-2	If the vacuum is low or non-existent, the reason could be : a. that the bypass valve is not closing properly, due to dirt on the valve seat. b. air is entering the pump (check the front cover seals, flanges, etc...) c. the pump is worn and the internal tightness is out of specification (the piston bushings are worn, worn piston and cylinder, broken piston wear compensation springs, worn partition, broken shaft).
ABNORMAL HEATING OF BEARINGS			
4			This heating can be caused by :
	4-1		- excessive tension in the transmission (belt or chain) on the pump shaft.
	4-2		- excessive pulling on the pump flanges by the piping (in this case, it must have been necessary to force the piping into position to connect it to the pump).
	4-3		- poor alignment of the pump - due for example to 4-2 (the pump is partially or totally uncoupled, the pump shaft and drive shaft are not aligned with each other).
	4-4		- inadequate anchoring of the pump unit leading to deformation of the chassis (make sure that the chassis is clear of the ground except for the 3 anchoring points).
	4-5		- seizing of the bushings (cured product preventing lubrication and cooling, excess power, etc...).
LEAKING SEALS			
5			The seal may leak if : a. it was damaged during assembly (scratching on the shaft), damage to 'O'rings in seal, b. it is incompatible with the product (chemical and mechanical aggression / abrasion of 'o' rings and seal faces), c. it is worn through normal use.
6			The shaft is worn at the seal or does not rotate correctly due to poor alignment, excessive tension on the transmission belts, chains, etc...

			ABNORMAL NOISES
			These noises can be caused by hydraulic and mechanical sources. They can be distinguished by the fact that only the former disappear (or at least lessen) when air is allowed into the inlet pipe.
7			**HYDRAULIC NOISES**
			These noises can come from insufficient product being supplied to the pump, or :
	7-1		- the rotation speed is too high for the installation conditions (increase of viscosity due to a change of product or a reduction of temperature, etc.).
	7-2		- that the suction head is too high or has become too high due to excessive head losses following clogging of the piping or filter, a change of viscosity of the liquid, etc.,
	7-3		- an increase of the vapour pressure with a rise of temperature.
8			**MECHANICAL NOISES**
			These can stem from :
	8-1		- the bypass valve knocking on the seat when the discharge pressure is close to the bypass adjustment pressure (turn the adjustment screw after making sure that the electric motor is suitably protected).
	8-2		- abnormal stress on the pump : the transmission is pulling on the shaft, pulling on the flanges by the piping.
	8-3		- a broken part or foreign body has entered the pump.
			EXCESS POWER CONSUMPTION
9			The most spectacular event occurs when a diesel engine stalls or the power to an electric motor is shut off.
	9-1		If this incident occurs when closing the discharge line, the cause may be : a. the bypass is assembled back to front. b. the bypass is adjusted too tight. c. the motor protection is adjusted too low or wrong circuit breaker have been fitted.
	9-2		If the incident occurs during operation, the cause could be : a. an inadequate motor (in this case, the discharge pressure complies with what was expected). b. head losses higher than expected - following higher viscosity or specific gravity than planned initially (in this case, the discharge pressure is higher than that planned. The pressure can be reduced by loosening the bypass adjustment screw - the flow is decreased). c. excessive speed of rotation. d. a fault of the equipment (faulty alignment, deformation of the chassis, stress exerted by the piping on the flanges, seizing, etc.).
			Excessive consumption of electricity can also be due to a poor motor connection (e.g. a 3 phase motor operating on 2 phases).

CERTIFICATE OF CONFORMITY

CE

Mouvex, ZI La Plaine des Isles - Rue des Caillottes - 89000 Auxerre France, declares the following equipment :

Set-up : ☐ Pump / Compressor « bare-shaft » ☐ Pumping Unit / Compressor Unit

Type : ☐ Eccentric Disc Pump ☐ Vanes Pump ☐ Lobes Pump
☐ Peristaltic Pump ☐ Centrifugal Pump ☐ Other Pump
☐ Screws compressor ☐ Vanes compressor ☐ Hydraulic cooler

Designation : _____ s/n° : _____

According to the specifications recorded in the file N° : _____

is in conformity with the provisions of the following Directive :

- **« MACHINES » Directive 2006/42/EEC** as transposed by the national legislation, concerning safety equipments and arrangements relative to mechanical and electric risks applicable to rotative machines.

NF EN 809:2009 NF EN 1672-2:2009 NF EN ISO 13857:2008 NF EN 12162:2009

And with the following marking : Ex **II2 G c IIB-T4 Max T° Flow = 80°C**
is in conformity with the provisions of the following Directive :

- **« ATEX » Directive 94/9/EC** (23 march 1994) as transposed by the national legislation, concerning equipment intended to be used in explosive atmospheres. Conformity obtained by application of the standards :

NF EN 1127-1:1997 NF EN 13463-1:2009 NF EN 13463-5:2009

ATEX Certification delivered by INERIS, Notified Body *(INERIS - Parc Technologique Alata – 60550 Verneuil-en-Halatte - France).*

The equipment indicated above must be used according to the foreseen use by its design and its manufacturing, and according to the current standards.

We, undersigned, declare that the concerned equipment is in conformity with the Directives listed above and in the applicable standards in force.

For Mouvex SAS Company.
Date : _____

Quality Manager

MOUVEX sas : Z.I La Plaine des Isles – 2, rue des Caillottes - 89000 AUXERRE – France – SAS au capital de 8 496 855 €
Tél : (33) 3.86.49.86.30 – Fax : (33) 3.86.46.42.10 – RCS AUXERRE 389 236 548 – APE 291 B – FR 85 389 236 548
www.mouvex.com

SPECIMEN