INSTRUCTIONS 1004-H00 e

Section	1004
Effective	October 2016
Replaces	June 2016

Original instructions

SLS24 i - SLS36 i PUMPS

INSTALLATION

OPERATION

MAINTENANCE

Дистрибутор:
България, София 1528, ул."Поручик Неделчо Бончев" 3, ет.5
+359 2 973 27 67, +359 2 973 2370; office_bg@opwmarket.com

ECCENTRIC PISTON PUMP
MOUVEX PRINCIPLE
SAFETY INSTRUCTIONS, STORAGE, INSTALLATION AND MAINTENANCE
SLS24 i - SLS36 i MODELS

TECHNICAL CHARACTERISTICS

- Maximum pump speed : 460 rpm
- Running temperatures :
  - ambient .....-15°C → + 40°C
  - continuous pomped product .....-15°C → +100°C
  - washing / rinsing / sterilisation product..... 0°C → +121°C
  - heating fluid (jacket) .....-15°C → +180°C
- Maximum suction pressure :
  - In normal use, the suction pressure must be higher than the required NPSH and **less than 2 barg** (29 psig).
  - During **CIP/SIP** of the pump, the suction pressure must not exceed **3 barg** (43,5 psig).
  - Pump **stopped**, the pressure must not exceed **6 barg** (87 psig).
- Acceptable maximal differential pressure :
  - SLS24 i . . . . .9 bar (130,5 psi)*
  - SLS36 i . . . . .6 bar (87 psi)*
- Maximum pressure jacket : 5 barg (72,50 psig)
- Cylinder capacity :
  - SLS24 i . . . . .0,946 litre
  - SLS36 i . . . . .1,420 litre

* When the pump works with an inlet gauge pressure less than zero, the maximum outlet pressure will be calculated as if the inlet pressure is equal to zero.

Definition of safety symbols

This is a SAFETY ALERT SYMBOL.
When you see this symbol on the product, or in the manual, look for one of the following signal words and be alert to the potential for personal injury, death or major property damage.

DANGER

Warns of hazards that WILL cause serious personal injury, death or major property damage.

WARNING

Warns of hazards that CAN cause serious personal injury, death or major property damage.

CAUTION

Warns of hazards that CAN cause personal injury or property damage.

NOTICE

Indicates special instructions which are very important and must be followed.

USED PRESSURE UNITS

Unit without suffix :
Differential pressure, for example, pressure difference between equipment suction and discharge.

Unit with suffix "a" :
Absolute pressure.

Unit with suffix "g" :
Gauge pressure, given regarding to atmospheric pressure (~101325 Pa, taken at 1 bar / 14,5 psi in this IOM).

Example :
P_{suc} = -0,2 barg = 0,8 bara
P_{dis} = 8,8 barg = 9,8 bara
$\Delta P = P_{dis} - P_{suc}$ = 9 bar

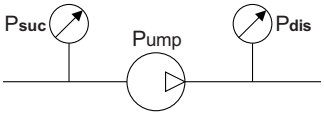

TABLE OF CONTENTS — *Page*

1. OVERALL DIMENSIONS 3
2. INSTALLATION 8
2.1 Installation design 8
2.2 Orientation of the pump ports 9
2.3 Direction of rotation 9
2.4 Protection of the pump installation 9
2.5 Hoisting devices 10
2.6 Unit Assembly 10
3. UTILISATION 13
3.1 Noise level 13
3.2 Commissioning 13
3.3 Dry running 13
3.4 Pump stop 13
3.5 Scrapping 13
4. CLEAN IN PLACE (CIP) & STERILISATION IN PLACE (SIP) 14
4.1 General 14
4.2 CIP circuit recommended 14
4.3 Pumps arranged in series 14
4.4 Pumps arranged in parallel 15
4.5 Successive cycles 16
4.6 Sterilisation In Place (SIP) 16
5. MAINTENANCE 16
5.1 Necessary tools 16
6. OPENING OF THE PUMP 17
6.1 Assembly / Dismantling 17
6.2 Checking of parts 18
7. ASSEMBLY OF CYLINDER/PISTON 20
8. PROTECTION OF THE BELLOWS 21
9. CHANGING THE LIP SEAL 23
10. CHANGING THE ORIENTATION OF THE PORTS 24
10.1 Discharge port 24
10.2 Suction port 24
11. DRAINING OF BEARING 25
12. OPTIONS 25
12.1 Bellows monitoring system 25
13. STORAGE 26
13.1 Short duration (≤ 1 month) 26
13.2 Long duration (> 1 month) 26
13.3 Restarting 26
14. TROUBLESHOOTING 27
15. CERTIFICATE OF CONFORMITY 29

1. OVERALL DIMENSIONS

SLS24 i - SLS36 i
with flanges

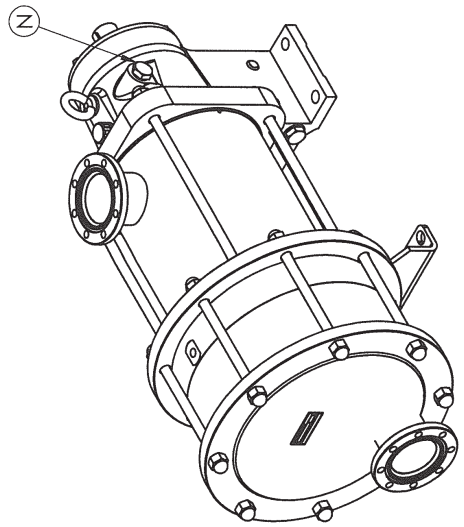

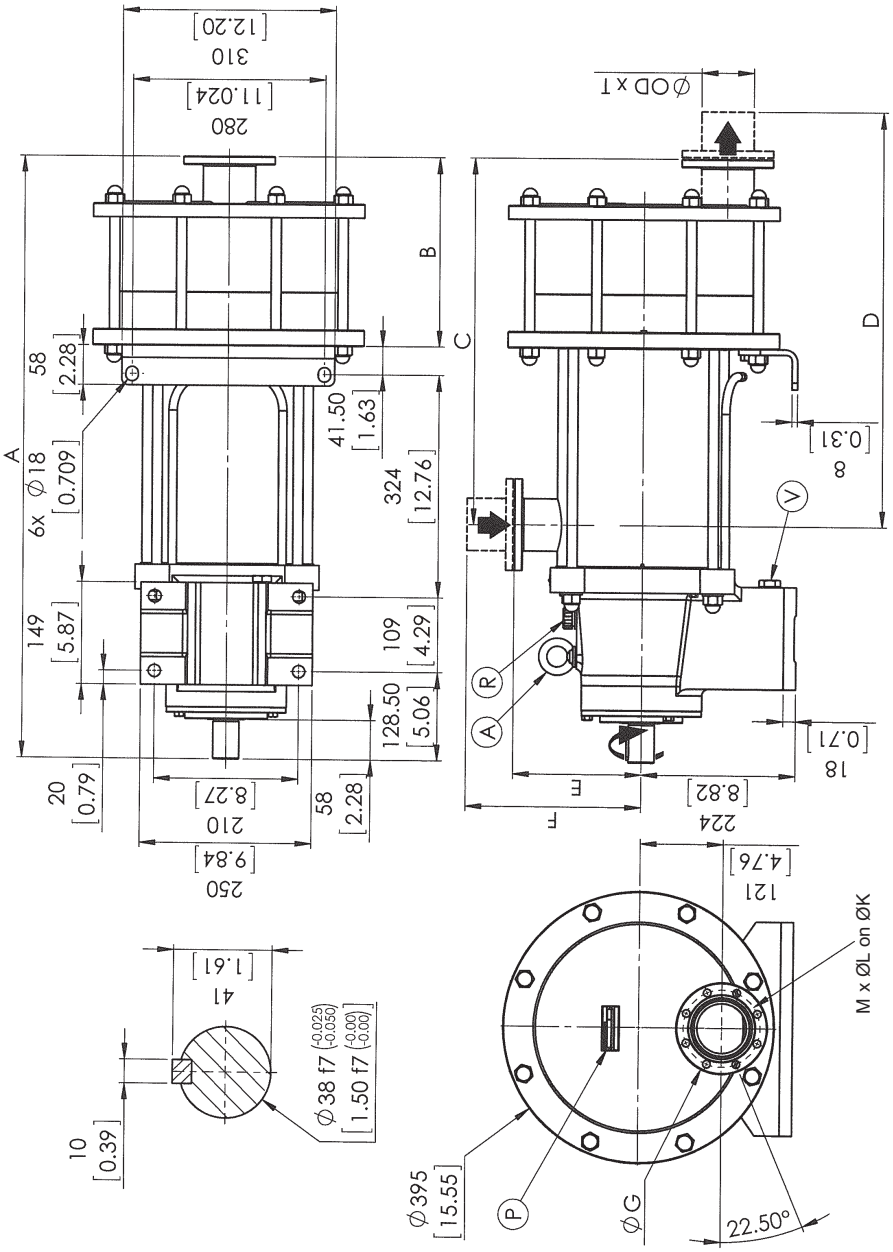

		DN	A	B	C	ØG	E	F	D	ØOD x T	M (no unit)	ØL	ØK	Masse -kg- (Weight -lb-)
DIN 11864 BF-A	SLS24i	80 [3,15]	879 [34,606]	276 [10,866]	533,5 [21,004]	133 [5,236]	187 [7,362]	214,5 [8,445]	561 [22,087]	85 x 2,00 [3,346 x 0,079]	8 -	11 [0,433]	112 [4,409]	185 [408]
	SLS36i	80 [3,15]	905,5 [35,65]	302,5 [11,909]	560 [22,047]	133 [5,236]	187 [7,362]	214,5 [8,445]	577,5 [22,736]	85 x 2,00 [3,346 x 0,079]	8 -	11 [0,433]	112 [4,409]	200 [441]

A	Lifting ring
P	Pump plate
R	Filling / Breather
V	Draining
N	Oil level

SLS24 i - SLS36 i
with connections

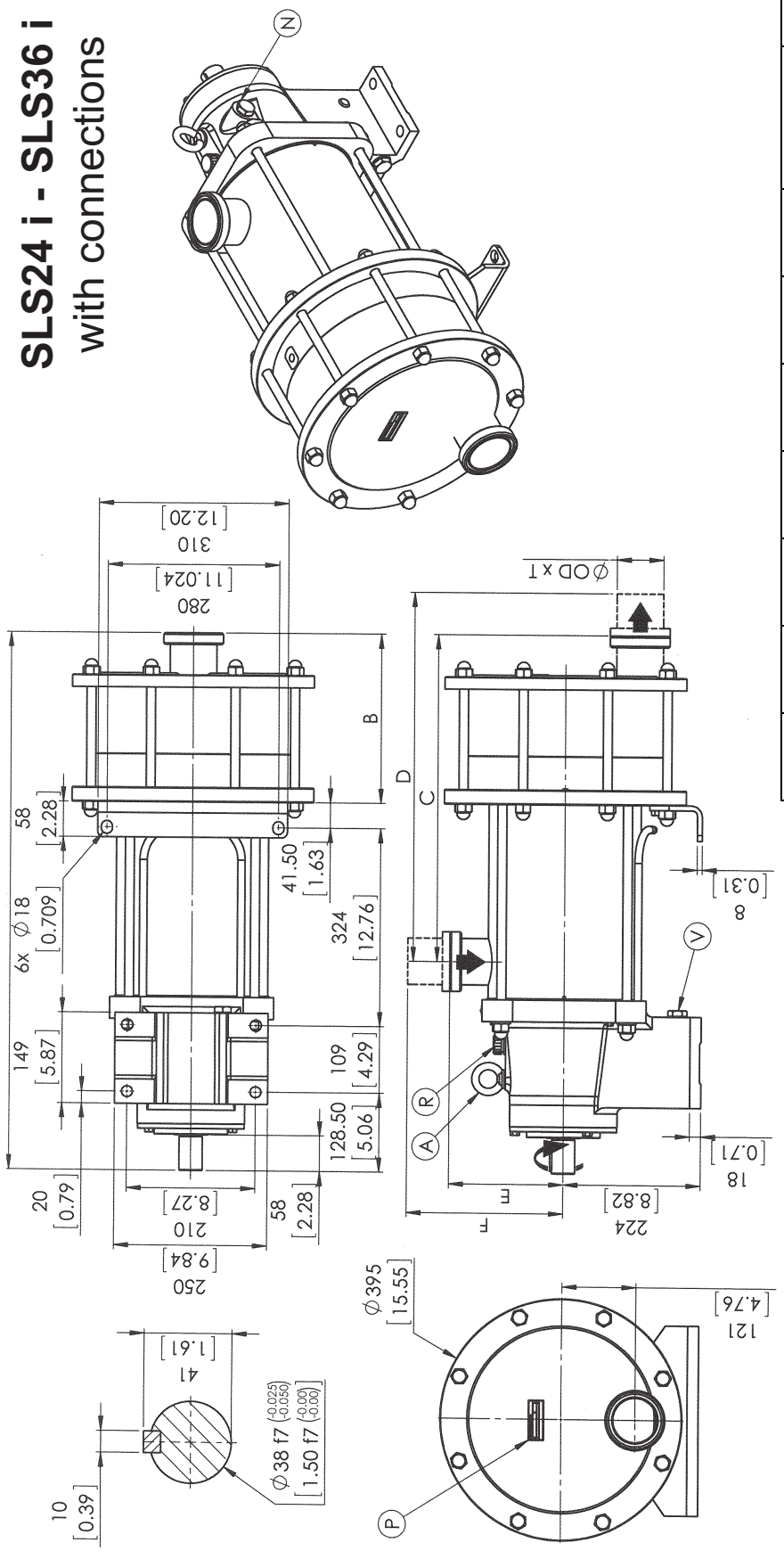

		DN	A	B	C	D	E	F	ØOD x T	Masse -kg- (Weight -lb-)
SMS 1145	SLS24i	76 [2,992]	879 [34,606]	276 [10,866]	533,5 [21,004]	566,5 [22,303]	187 [7,362]	220 [8,661]	76,1 x 1,6 [2,996 x 0,063]	185 [408]
	SLS36i	76 [2,992]	905,5 [35,65]	302,5 [11,909]	560 [22,047]	593 [23,346]	187 [7,362]	220 [8,661]	76,1 x 1,6 [2,996 x 0,063]	200 [441]
Clamp ISO 2852	SLS24i	76 [2,992]	879 [34,606]	276 [10,866]	533,5 [21,004]	566,5 [22,303]	187 [7,362]	220 [8,661]	76,7 x 1,9 [3,02 x 0,075]	185 [408]
	SLS36i	76 [2,992]	905,5 [35,65]	302,5 [11,909]	560 [22,047]	593 [23,346]	187 [7,362]	220 [8,661]	76,7 x 1,9 [3,02 x 0,075]	200 [441]
Clamp ASME-BPE (2009)	SLS24i	76 [2,992]	879 [34,606]	276 [10,866]	533,5 [21,004]	566,5 [22,303]	187 [7,362]	197 [7,756]	76,20 x 1,651 [3 x 0,065]	185 [408]
	SLS36i	76 [2,992]	905,5 [35,65]	302,5 [11,909]	560 [22,047]	593 [23,346]	187 [7,362]	197 [7,756]	76,20 x 1,651 [3 x 0,065]	200 [441]
DIN 11851	SLS24i	80 [3,15]	879 [34,606]	276 [10,866]	533,5 [21,004]	566,5 [22,303]	187 [7,362]	220 [8,661]	87 x 3 [3,425 x 0,118]	185 [408]
	SLS36i	80 [3,15]	905,5 [35,65]	302,5 [11,909]	560 [22,047]	593 [23,346]	187 [7,362]	220 [8,661]	87 x 3 [3,425 x 0,118]	200 [441]

A	Lifting ring
P	Pump plate
R	Filling / Breather
V	Draining
N	Oil level

SLS24 i - SLS36 i
with heating jacket

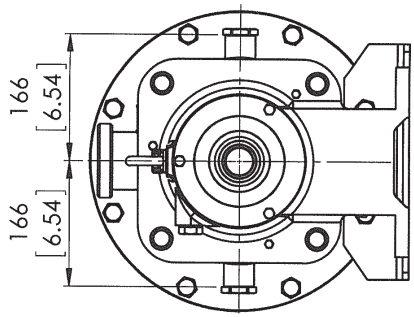

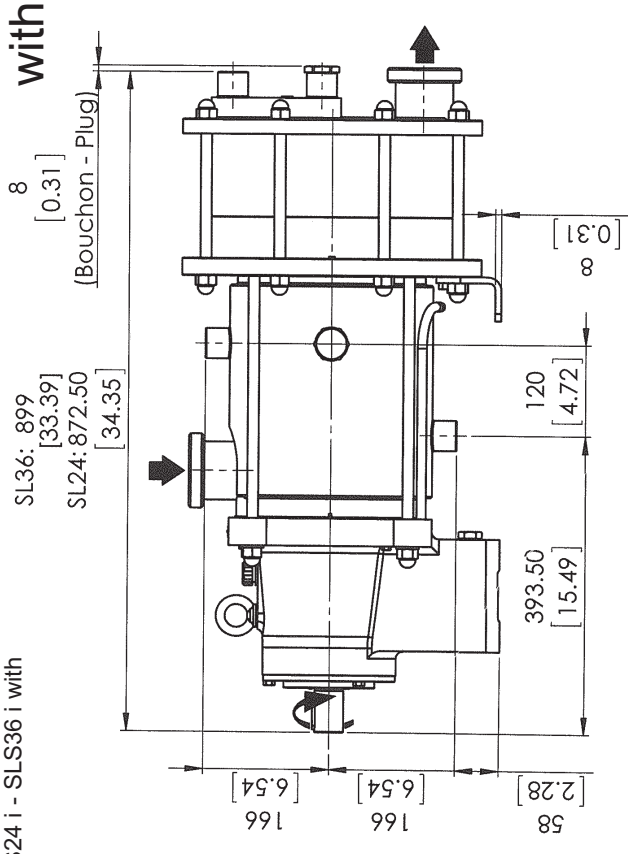

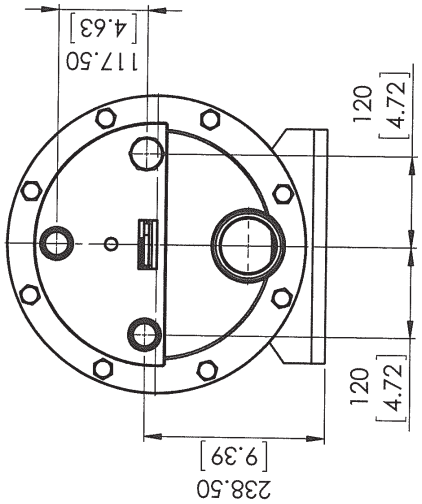

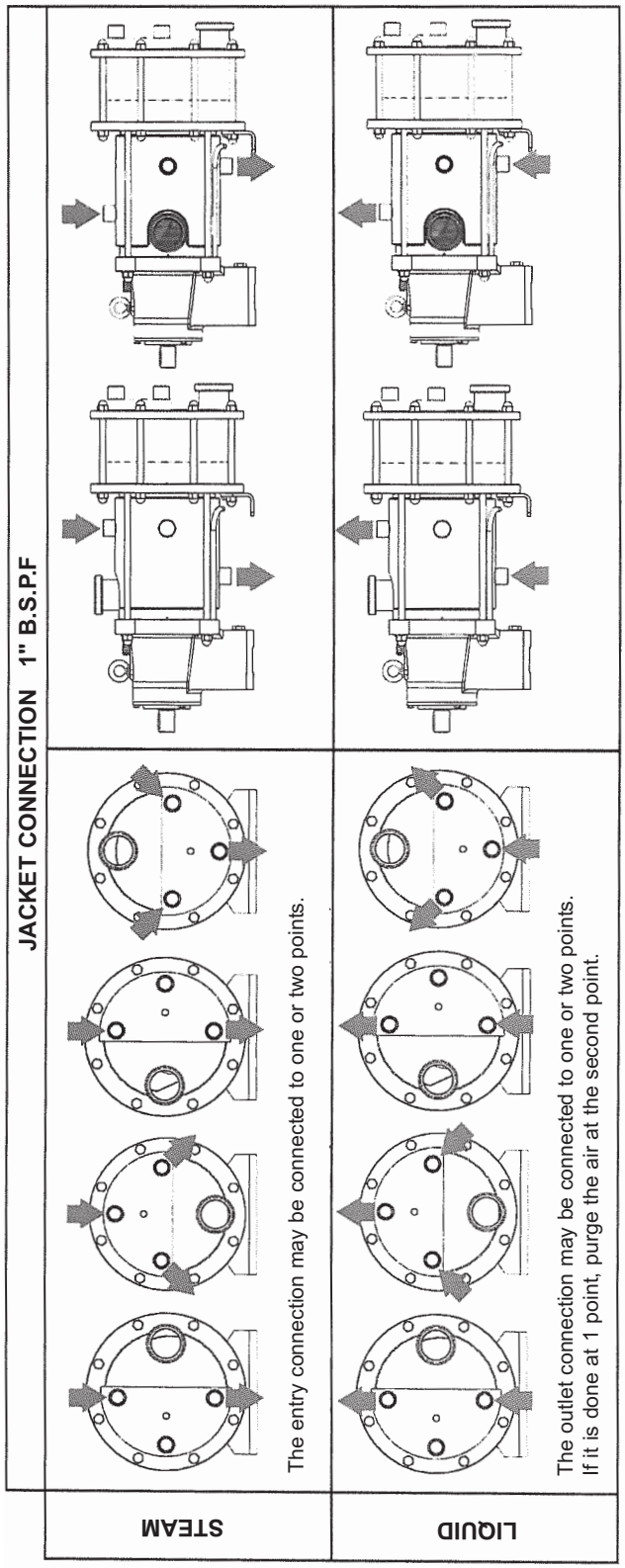

FOR ATEX PUMPS, SEE INSTRUCTIONS NR 1071.

For the other sides, see the overall dimensions plan 'SLS24 i - SLS36 i with flanges/connections'.

Weight : + 8 kg

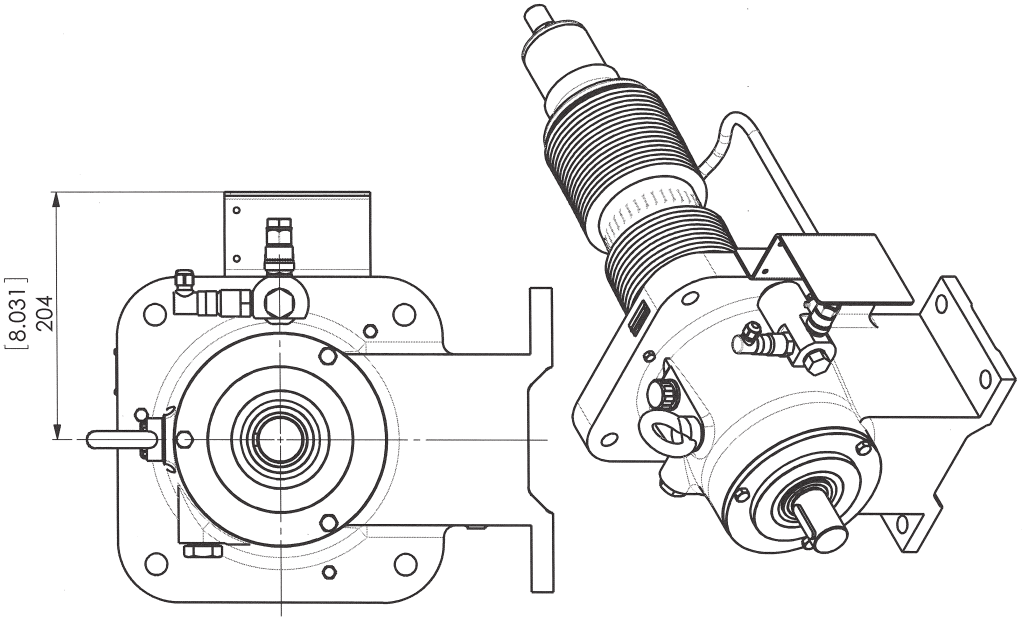

Bellows monitoring system
SLS24 i - SLS36 i

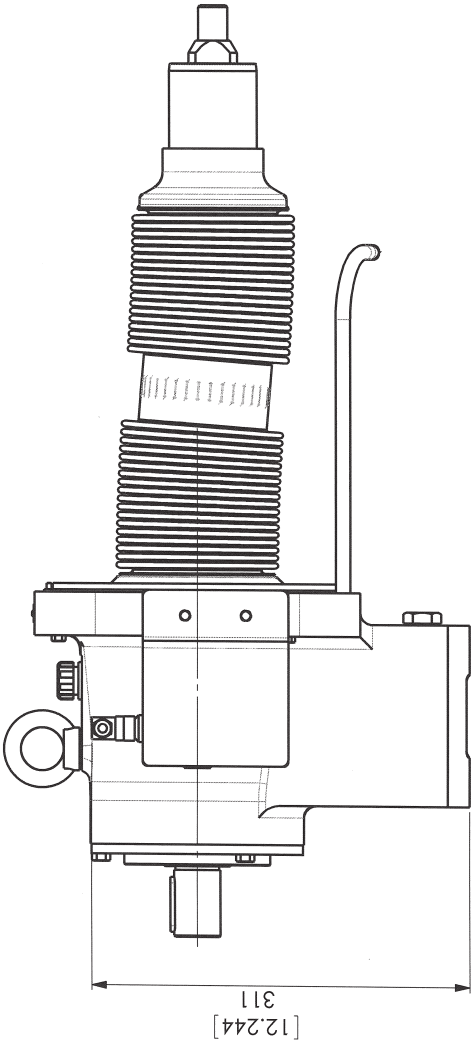

NOTA :
Setting of detection levels is done in factory and do not have to be modified.
For other dimensions, report to pump dimensional drawing.
The dismantling of the transmission could be done only in factory.

Bellows monitoring system ATEX
SLS24 i - SLS36 i

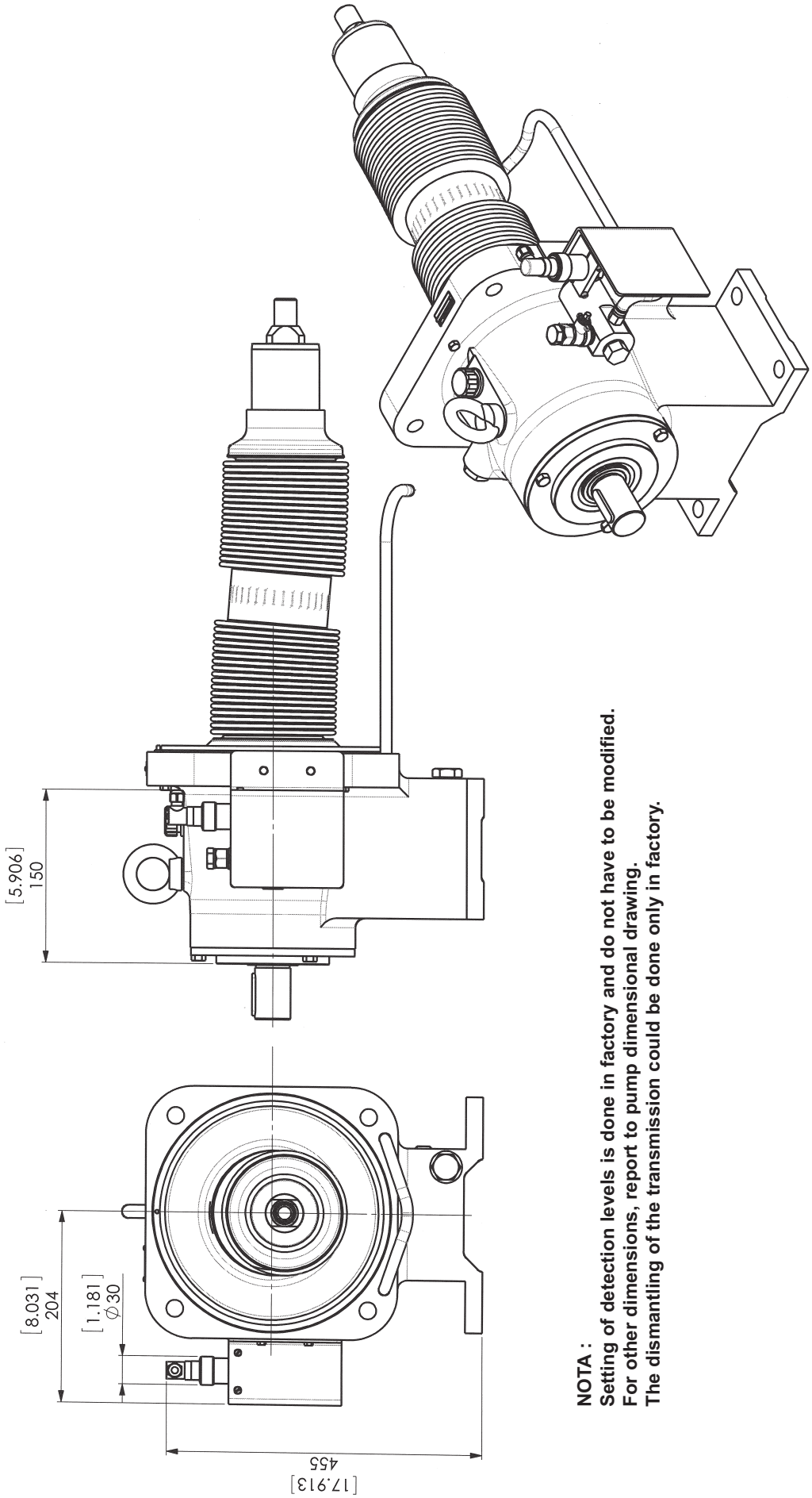

NOTA :
Setting of detection levels is done in factory and do not have to be modified.
For other dimensions, report to pump dimensional drawing.
The dismantling of the transmission could be done only in factory.

2. INSTALLATION

POSSIBLE POSITIONS (pumps with heating jacket : see § OVERALL DIMENSIONS - Heating jacket)				
ASPIRATION	1. 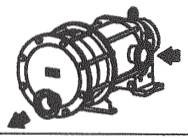	2. STANDARD 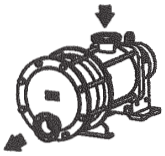	3. 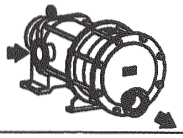	
DISCHARGE	1. 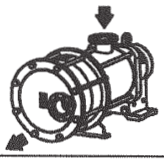	2. 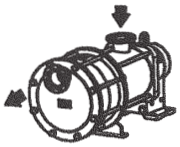	3. 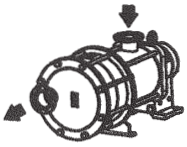	4. STANDARD 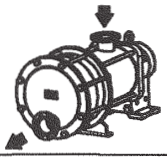

2.1 Installation design

2.1.1 Pump

To obtain the service expected from a MOUVEX pump, regarding both performance and longevity, it is vital that the type of pump, its speed and the materials used for its construction are determined as a function of the pump output, its installation and operating conditions.

You can contact our Technical Services at any time to ask for the information you require.

2.1.2 Pipe

Not recommended

To be avoided if possible

Recommended

Suction pipe length

Length should be as short as possible.

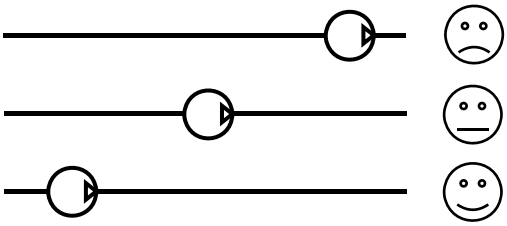

Suction pipe diameter

Diameter must be at least equal to pump port diameter and even more if required by pumping conditions.

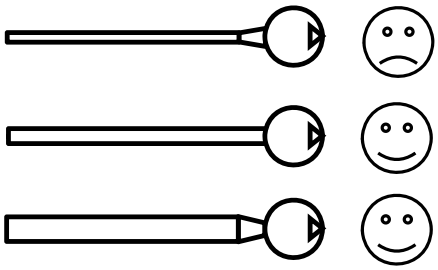

Suction pipe configuration

Check tightness to avoid accidental air intake.

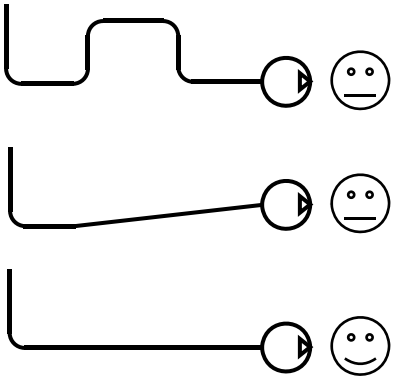

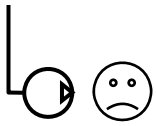

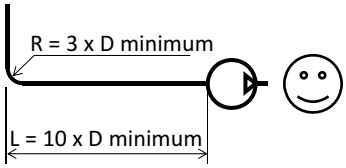

Pipe alignment and supporting

Pump must not support piping nor endure stress resulting from piping weight or dilatation effects. For latters, expansion loops should be included.

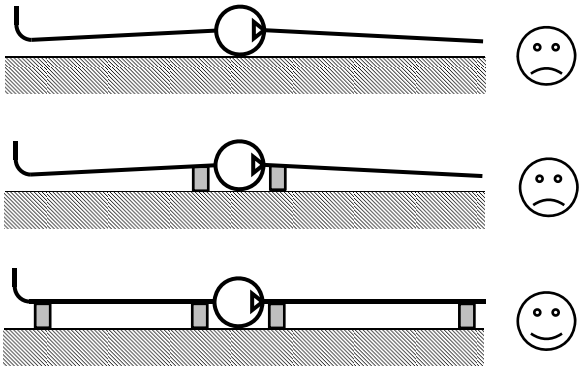

Pipe equipment

- Place valves close to the pump to avoid draining pipe during maintenance operations. Preferably select full bore ball or butterfly valves.

  Pressure connections on pump suction and discharge are recommended for settings and controls.

  Make sure piping, vessels valves and other installation devices are carefully cleaned before mounting.

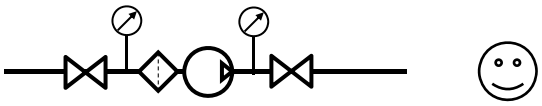

- MOUVEX pumps are self priming. However, if line emptying should be avoided and/or if suction lift is high, a foot valve can be added.

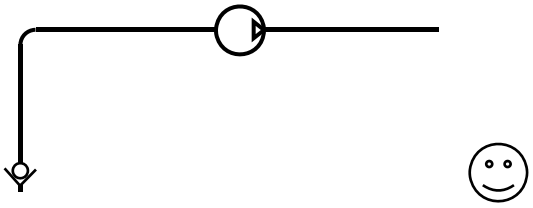

- If pumped liquid presents a risk of in pipe solidification and potential dilatation, low points on the pipe should be avoided or equipped with drain valve.

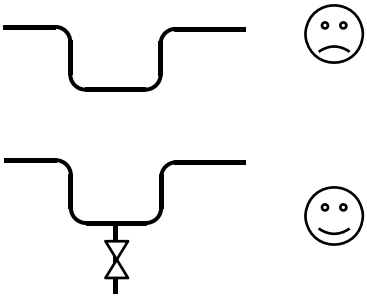

- If installation is heated, it must be designed so that fluid dilatation can evacuate through piping. Therefore fluid contained in piping must be heated before fluid contained in the pump. Also check that a heated pump is not isolated by closed valves.

The SLS Series pump is a selfpriming volumetric PD pump. Therefore, the pump must not run on a circuit with a closed valve. This is valid both for the suction circuit and for the discharge circuit.

2.2 Orientation of the pump ports

The suction and discharge ports may be oriented in various positions.

If the ports positions needs to be changed at any time, see the corresponding paragraph.

NOTICE
SLS-Series pumps remains drainable whatever position is chosen for the inlet port, but the outlet port must be at the bottom (position 4) to keep the self-draining capability.

2.3 Direction of rotation

An arrow situated on the bearing housing indicates the correct direction of rotation.

When looking at the shaft, the rotation will be clockwise. When looking at the front cover, the direction of rotation will be anti-clockwise.

Verification of the correct rotation direction : Turn the pump the wrong way is not dangerous for the pump.

2.4 Protection of the pump installation

- Before any start-up, during operation or complete stopping of the pump, make sure the valves are open.
- During stop periods, with the pump full of product, either the suction or discharge circuit must be left open to enable expansion or contraction of the pumped product through reheating or cooling. If this instruction is not complied with, The bellows may be damaged and lead to premate failure.
- The bearing must be ventilate at all times, therefore the breather mounted on the bearing must be re-used. Never put the plug on.

- It is possible to have a puncture detection system with double-walled bellows : an inert gas is maintained under pressure between the 2 walls and said pressure is permanently monitored. A signal is dispatched immediately should a wall become punctured. See Instructions 1011-S00.
- The stop time may lead to cooling of the product in the pump and therefore to an increase in viscosity. If this is the case, we recommend re-starting the pump at a speed adapted to this new viscosity (starting pump). Once the product arrives in the pump at the installation definition temperature, the pump may run at the speed specified for this application.
- Protection against excess pressure :

  The pump must be protected against excess pressure. It can be delivered with a pressure switch to carry out this function.

  If protection is provided by a control valve, check that the system does not generate excess pressure at the bellows (particularly if there are water hammers). Operating in this way will damage the bellows and shorten their lifetime.

WARNING	
Hazardous pressure can cause personal injury or property damage.	INCORRECT SETTINGS OF THE PRESSURE RELIEF VALVE CAN CAUSE PUMP COMPONENT FAILURE, PERSONAL INJURY, AND PROPERTY DAMAGE.

WARNING	
Hazardous pressure can cause personal injury or property damage.	FAILURE TO INSTALL ADEQUATELY SIZED PRESSURE RELIEF VALVE(S) CAN CAUSE PROPERTY DAMAGE, PERSONAL INJURY OR DEATH.

WARNING	
Hazardous pressure can cause personal injury or property damage.	PUMPS OPERATING AGAINST A CLOSED VALVE CAN CAUSE SYSTEM FAILURE, PERSONAL INJURY AND PROPERTY DAMAGE.

- Protection against foreign bodies :

  The pump and the installation must also be protected against any risk of damage through the passage of foreign bodies by mounting a pre-filter at the pump suction.

  In the case of foreseeable clogging of the pre-filter, we recommend using a vacuum switch to inform the user of pre-filter clogging. Prolonged running under cavitation may damage the pump.

  The largest dimensions of the allowable particles in the pump are :
  - Soft particles : .....14 mm
  - Hard particles : .....2 mm

2.5 Hoisting devices

Put a sling in the lifting ring of the transmission and another under the pump cylinder.

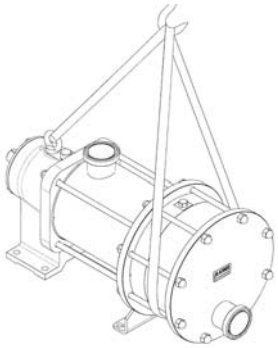

2.6 Unit Assembly

The following instructions apply to pumps delivered with a bare shaft or for MOUVEX motor-driven pump units (if the latter have no specific instruction notice).

2.6.1 INSTALLATION OF UNITS

WARNING	
The weight ot the parts can be dangerous and may provoke bodily injuries or material damages.	BE CAREFUL WITH THE WEIGHT OF THE PARTS WHEN THEY ARE BEING REMOVED.

WARNING	
Dangerous voltage. Can cause injury and death.	DISCONNECT THE ELECTRICITY SUPPLY BEFORE ANY MAINTENANCE OPERATION.

The base below the unit is fundamental to ensuring correct operation and long service life.

The unit's base must be flat, level and sufficiently resistant to absorb the stresses caused by the motor-driven pump unit without deformation (if it is made of concrete, it must comply with the BAEL 91 standard).

If the unit is fastened using securing lugs or bolts, it must be carefully wedged to avoid deforming the frame while the bolts are tightened. A deformed frame would apply damaging stresses on the pump and the drive mechanism and misalign the coupling, causing vibrations, noise and premature wear. Ensure that the frame is well above the floor, except from the support plates.

If the unit is to be used in a food environment, support plates that allow the unit to be lifted for easier cleaning are recommended.

Allow, if possible, a clear space of approximately 50 cm on each side of the motor-driven pump unit (overall dimensions) to facilitate cleaning and give access if necessary to the pump, reduction gear and motor fastening nuts. In all cases, the dimensions around the motor-driven pump unit must be designed to give the space required for dismantling the pump (if the need arises, use the values given on the overall dimension drawing).

For staff and equipment protection, the frame includes a ground connection point that should be used.

2.6.2 ALIGNMENT OF THE MOTOR/PUMP OR REDUCTION GEAR/PUMP SHAFTS

WARNING	
	IF OPERATED WITHOUT THE SHAFT GUARD, THERE IS CONSIDERABLE RISK OF SEVERE PERSONAL INJURY, SIGNIFICANT PROPERTY DAMAGE OR EVEN DEATH.
Do not operate without guard in place.	

WARNING	
	DISCONNECT THE ELECTRICITY SUPPLY BEFORE ANY MAINTENANCE OPERATION.
Dangerous voltage. Can cause injury and death.	

NEVER START A UNIT IF THE COUPLING ALIGNMENT IS INCORRECT. THIS IS A CONDITION OF OUR GUARANTEE.

REMINDER :

Coupling must never be used to compensate for a misalignment.

To control the alignment between the coupling and the shaft, use a straight-edge for concentricity and thickness gauges for angular misalignment (see instructions of the coupling for authorised values).

The 3 figures below show in detail the operation and the possible defects :

Make this check for 4 points: up - down - left - right	
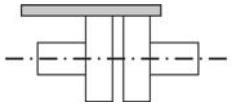	*Correct*
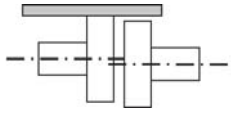	*Out-of-parallelism*
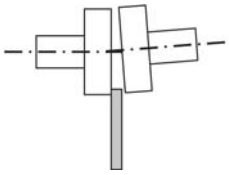	*Angular defect*

Controlling the alignment at each stage of the installation is important to be sure that none of these stages have generated stresses on the unit or the pump :

- after fastening on the foundations.
- after fastening the pipes.
- after the pump has been operated at the normal operating temperature.

Where the pumps are supplied assembled as a unit, the motor and pump shafts have been perfectly aligned in the factory before delivery, but they must be systematically controlled on acceptance at the site and realigned if necessary.

To do this, do not modify the wedging of the various parts, but check the flatness of the support surface and use the adjustable foot to clear the frame of stresses that could affect it.

2.6.3 ELECTIC MOTORS

WARNING	
Dangerous voltage. Can cause injury and death.	DISCONNECT THE ELECTRICITY SUPPLY BEFORE ANY MAINTENANCE OPERATION.

Check the compatibility of the instructions on the motor with the supply voltage.

Follow the wiring diagram, use wiring that is appropriate for the power and be particularly careful about the contacts which must be well tightened.

The motors should be protected with circuit breakers and suitable fuses. Connect the regulatory electrical grounding.

2.6.4 THERMIC MOTORS

CAUTION	
Excessive temperature can cause injury or severe damage.	THE SURFACES CAN BE AT A TEMPERATURE LIABLE TO CAUSE INJURY OR SEVERE DAMAGE.

Do not forget that these motors are not reversible. It is absolutely necessary to carefully control the suction and discharge sides of the pump before connecting the group to the piping.

Using electric motors is very common now; however, we strongly advise careful reading of the accompanying instruction manual.

2.6.5 CONTROL OF THE SENSE OF ROTATION

WARNING	
Any unforeseen start-up can cause serious injuries or important material damages.	TAKE ALL NECESSARY MEASURES TO RENDER ANY START-UP, EVEN ACCIDENTAL, OF THE PUMP DURING THE WORK IMPOSSIBLE.

WARNING	
Hazardous pressure can cause personal injury or property damage.	IT IS IMPERATIVE THAT THE HYDRAULIC PRESSURE IS RELEASED BEFORE EACH MAINTENANCE OPERATION TO AVOID PERSONAL INJURY OR MATERIAL DAMAGE

WARNING	
Do not operate without guard in place.	IF OPERATED WITHOUT THE SHAFT GUARD, THERE IS CONSIDERABLE RISK OF SEVERE PERSONAL INJURY, SIGNIFICANT PROPERTY DAMAGE OR EVEN DEATH.

This control needs to be done with no liquid pumped through the pump, and both the suction and discharge circuits venting to avoid generating unexpected pressure (at the suction side, for example). This will ensure that the control will not damage either the pump or the installation.

Start the pump empty to check that the connections are good and that the direction of rotation corresponds to the suction and discharge direction on the installation. If it is necessary to reverse the direction of rotation, follow the instructions below :

Three-phase motor : switch any 2 current input wires.

Bi-phase motor : switch two same phase wires.

Single-phase motor : follow the instructions on the notice supplied with the motor.

3. UTILISATION

3.1 Noise level

The sound level of a pump is greatly influenced by its conditions of use. Cavitation and pumping products with high gas contents generally increases the sound level.

Under the following pumping conditions :

- excluding cavitation
- discharge pressure :
  - SLS24 : . . . . 9 bar (130,5 psi)
  - SLS36 : . . . . 6 bar (87 psi)
- speed of rotation 450 rpm
- product viscosity of 1 cSt

The sound level reached for the SLS24 / SLS36 pump in good conditions without the drive is less than 83 dB(A).

3.2 Commissioning

Make sure that the circuit valves are open before starting the pump.

To avoid any risk of polluting the product to be pumped, rinse the whole installation before starting-up so as to eliminate any contaminants that may remain in the piping, tanks etc. at the time of installation.

For any pure water pumping during process or cleaning operations, consult Mouvex imperatively.

3.3 Dry running

The SLS series pump is self priming and is capable of emptying the pipes. To do this, it can run dry for a maximum duration of 5 minutes.

3.4 Pump stop

So as not to damage the pump, make sure that the pump is completely stopped before closing the valves.

3.5 Scrapping

The pump must be scrapped in compliance with the regulations in force.

During this operation, particular care must be paid to the drainage stages of the pump (pumped product) and of its transmission (lubricant).

4. CLEAN IN PLACE (CIP) & STERILISATION IN PLACE (SIP)

4.1 General

On-site cleaning (CIP) of an installation is undertaken by circulating various cleaning solutions through the equipment parts.

An automated CIP system enables :

- Preparation of the appropriate concentrations for the different cleaning solutions.
- Re-heating of certain cleaning solutions at the optimum temperature.
- Circulation of the different solutions through the equipment parts to be cleaned.
- Rinsing and drying of the equipment parts.

For the most part, automated CIP systems are an integral part of process equipments.

Before starting CIP and if the process has not been followed by a water flush, care must be taken that a minimum of residual products remains in the piping and in the pump. The SLS Series pumps, thanks to their excellent suction and compression capabilities, enable reducing the quantities of residual products. This minimises loss of products, eases cleaning and reduces cycle times.

The SLS Series pumps are perfectly adapted to all processes necessitating CIP. SLS-Series pumps are 3-A marked units and have been successfully tested for in-place cleanability according to EHEDG document n°2. By complying with the installation rules described above, these pumps will give you entire satisfaction for a long time.

The start of CIP must immediately follow the end of the process to avoid any clogging or untimely drying.

SLS SERIES PUMPS MUST NEVER BE USED AS CIP PUMPS.

Non-compliance with this instruction may lead to rapid wear of cylinder and piston.

4.2 CIP circuit recommended

In all cases, the pressure at the pump inlet during cleaning must not exceed 3 barg (43,5 psig).

The flow through the pump required for optimal cleaning is **40 - 45 m³/h**.

This flow corresponds to difficult cleaning (sticky and viscous products). It can be reduced for easier types of cleaning.

4.3 Pumps arranged in series

This type of assembly is preferred in all cases. It ensures optimal cleaning for the pump and makes use of the special design of the SLS Series, i.e. the possibility of lifting the piston with the cleaning product.

As the pressure at the pump inlet is higher than that at its outlet, the piston lifts from the cylinder and permits the passage of all the cleaning liquid through the SLS Series pump.

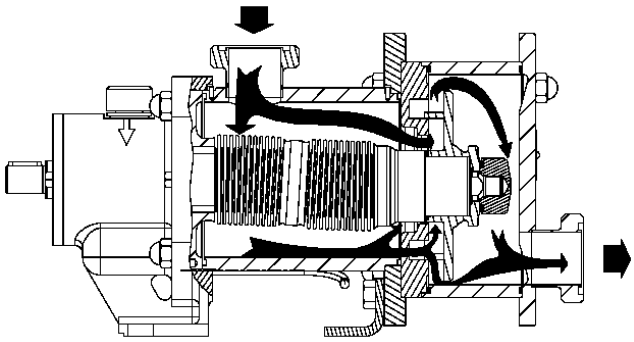

- A centrifuge pump is used for CIP cycles. This pump is placed upstream of the SLS Series pump.

  The centrifuge pump must be installed in series with the SLS Series pump.

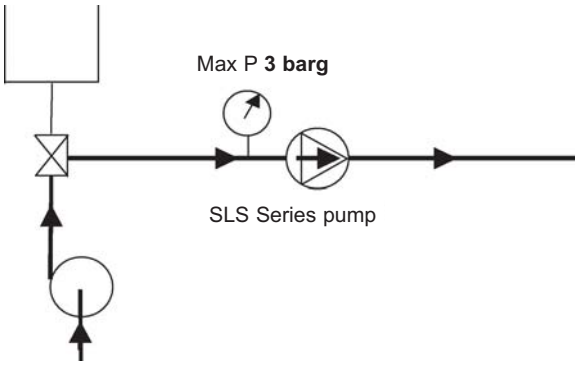

It is preferable not to run the SLS Series pump during CIP although low speed (< 100 rpm) is acceptable by alternating start/stop operation.

- In certain cases, the flow of the cleaning liquid required for the installation is higher than that recommended for cleaning the pump. In this case, a bypass must be used.

  The bypass valve is adjusted to divide the flow between the circuit flowing through the SLS Series pump and the bypass circuit.

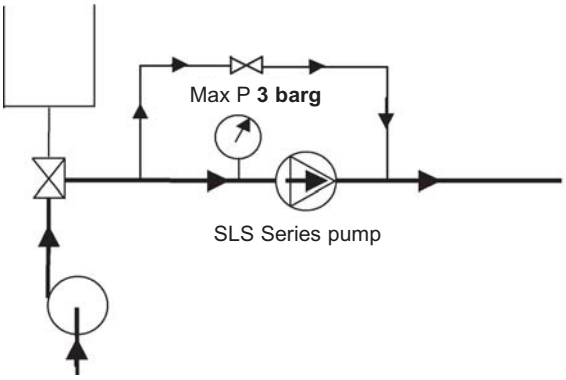

It is preferable not to run the SLS Series pump during CIP, although low speed (< 100 rpm) is acceptable by alternating start/stop operation.

- In certain cases, the cleaning pressure required for the installation is higher than 3 barg (43,5 psig). In this case, the use of a bypass is required and cleaning is done in 2 steps.

Cleaning the pump :
The cleaning flow should be limited during the cleaning of the SLS pump to ensure a maximum pressure of 3 barg (43,5 psig) at the SLS pump inlet.

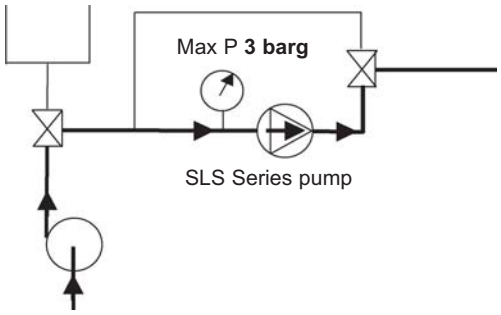

It is preferable not to run the SLS Series pump during CIP although low speed (< 100 rpm) is acceptable by alternating start/stop operation.

Cleaning the installation :
During this operation, the valve system used must ensure that no flow can pass through the pump so that the SLS Series pump does not rotate. Under these conditions, with the pump completely stopped, the pressure of the washing circuit can rise up to 6 barg (87 psig).

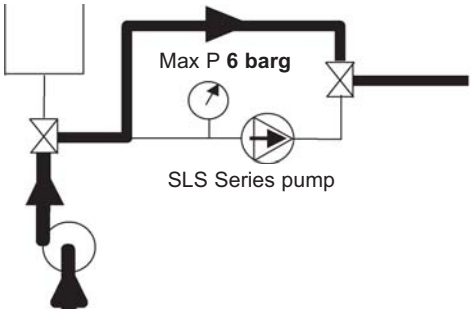

The pump must not run during this operation.

4.4 Pumps arranged in parallel

For applications where cleaning is easy and the differential pressure of, the SLS Series pump is lower than 2 bar (29 psi) during this operation, assembly in parallel is authorised. It should be noted that during cleaning, the SLS Series pump will be acting on a product with generally few lubricating properties. This will contribute towards wear of the pump.

The CIP centrifuge pump must never be installed in parallel with a SLS Series pump without taking special precautions.

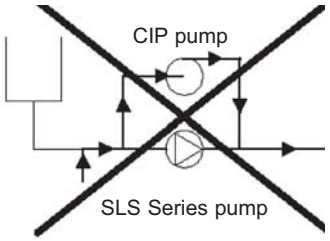

Indeed, in this case, the pressure at the inlet of the SLS Series pump is lower than the pressure at the discharge and the piston remains forced against the cylinder. Therefore, there the SLS Series pump no longer provides a passage. Its efficient cleaning can no longer be ensured and the cylinder/piston pair will become prematurely worn.

Authorised assembly :
As mentioned previously for applications where cleaning is easy, assembly in parallel is authorised when the valves are installed so that the cleaning pressure of the circuit does not come into contact with the SLS Series pump.

In this case, the SLS Series pump cleans itself.

Cleaning the pump :

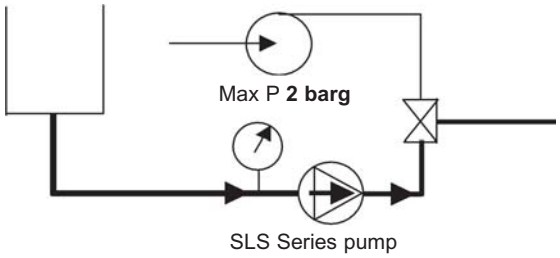

We recommend limiting the rotation speed of the SLS Series pump.

Cleaning the installation :

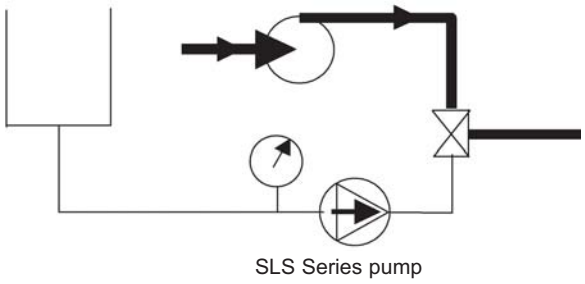

The SLS Series pump is stopped when cleaning the installation.

4. CLEAN IN PLACE (CIP) & STERILISATION IN PLACE (SIP) (continued)

4.5 Successive cycles

Generally, the most efficient CIPs comprise 5 stages :

1. **Pre-washing with clean water**
   Water at room temperature. 10 to 15 minute cycle. This pre-wash enables evacuation of the remaining residues.
2. **Washing with an alkaline detergent**
   Typically this is soda at 2,5% at a temperature of 80°C. 20 to 30 minute cycle. This wash particularly enables dissolving and evacuating grease and proteins.
3. **Rinsing with clean water**
   Water at room temperature. 10 minute cycle. This rinse enables avoiding the mixture of 2 cleaning solutions.
4. **Washing with an acid solution**
   Typically this is nitric acid at 2,5% at room temperature. 10 to 15 minute cycle. This wash particularly enables dissolving and evacuating proteins and inorganic salts.
5. **Rinsing with clean water**
   Water at room temperature. Several 1 to 2 minute cycles. These rinses enable evacuating all traces of acid solution.

During all these CIP stages, the average speeds of the cleaning liquids in the pipes must be between 1,5 and 3 m/s.

4.6 Sterilisation In Place (SIP)

The serie SLS pumps are perfectly adapted to all processes using SIP (Sterilisation In Place) : pump stopped / maximum 30 min per cycle / 1 or 2 cycles per day.

5. MAINTENANCE

5.1 Necessary tools

- 24 Socket wrench
- 13-32 Open-end spanner
- Hub puller
- 85 Open-end spanner or Monkey wrench

Tightened torques :

- M8 : 18 Nm
- M16 : 100 Nm
- M24 : 200 Nm

6. OPENING OF THE PUMP

WARNING	
Any unforeseen start-up can cause serious injuries or important material damages.	TAKE ALL NECESSARY MEASURES TO RENDER ANY START-UP, EVEN ACCIDENTAL, OF THE PUMP DURING THE WORK IMPOSSIBLE.

WARNING	
Hazardous pressure can cause personal injury or property damage.	DISCONNECTING THE FLUID OR PRESSURE CONTAINMENT COMPONENTS DURING PUMP OPERATION CAN CAUSE SERIOUS PERSONAL INJURY, DEATH OR MAJOR PROPERTY DAMAGE.

WARNING	
Hazardous pressure can cause personal injury or property damage.	FAILURE TO RELIEVE THE SYSTEM PRESSURE PRIOR TO PERFORMING ANY WORK ON THE PUMP OR THE INSTALLATION CAN CAUSE PERSONAL INJURY OR PROPERTY DAMAGE.

WARNING	
Hazardous or toxic fluids can cause serious injury.	IF PUMPING HAZARDOUS OR TOXIC FLUIDS, THE SYSTEM MUST BE FLUSHED PRIOR TO PERFORMING ANY SERVICE OPERATION.

WARNING	
The weight ot the parts can be dangerous and may provoke bodily injuries or material damages.	BE CAREFUL WITH THE WEIGHT OF THE PARTS WHEN THEY ARE BEING REMOVED.

CAUTION	
Slippery lubricant. Spills should be cleaned up.	THE PUMP LUBRICANT IS VERY SLIPPERY AND MAY CAUSE SERIOUS INJURY. ANY SPILLS MUST BE CLEANED UP.

6.1 Assembly / Dismantling

Before any dismantling, make sure that the pump has been drained and take the necessary measures to avoid starting-up. No start-up, even accidental, must be allowed.

- Disconnect the pump from the discharge pipe.
- Unscrew the 8 nuts **106** and remove the 8 tierods **105** and **107**.

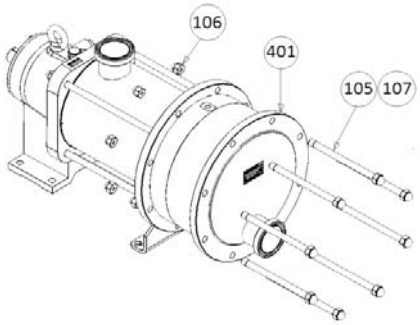

- Remove the front cover **401**. If the discharge piping is mounted in a rigid manner, pivot the bottom **401** so as to free the connection.

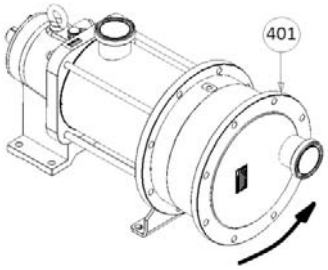

- Remove the outlet tube **402** and its seals **205**.

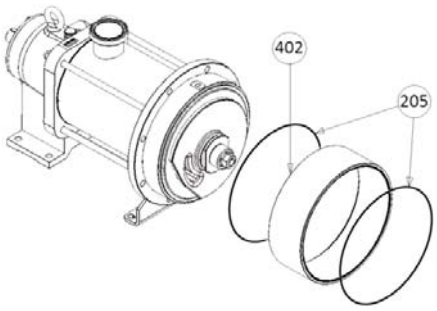

- Hold the piston **301** with a 85 Open-end spanner or a monkey wrench and unscrew the nut **304** and its seal **305**.

It is important to keep a good grip on the piston, its rotation could lead to deterioration of the bellows.

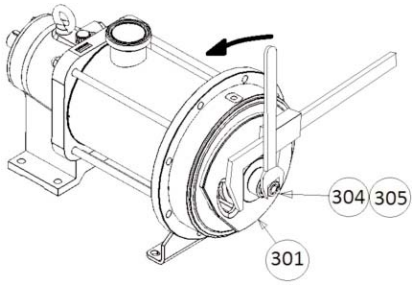

- To make handling of the cylinder/piston unit easier, move the lifting ring from the transmission body to the cylinder.

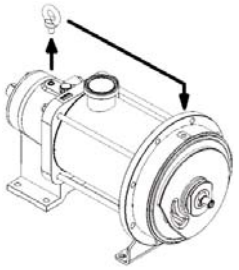

- Screw the lifting hook in the tapped hole of the cylinder, provided for this purpose and tighten the screw in the location of the lifting ring.

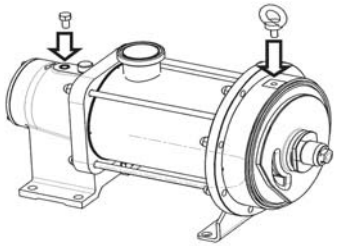

- With the help of a hub puller, extract the piston **301**.

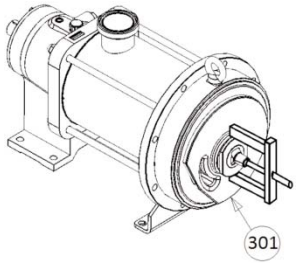

- Remove the cylinder **201** and the seals **113** and **306**.

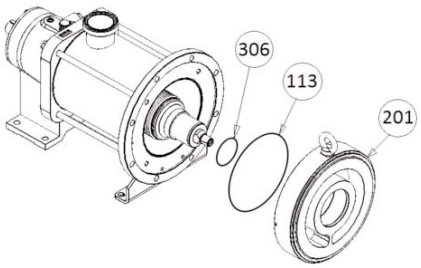

6.2 Checking of parts

The piston **301** and the cylinder **201** are active parts (wearing parts).on which the pump's efficiency directly depends. It is therefore advisable to regularly check the pump's efficiency and replace the cylinder / piston if it decreases.

In addition, as using a cylinder / piston that is too worn may damage the pump's transmission system, it is advisable to replace the cylinder / piston if the maximum acceptable wear dimensions defined in the table below are reached.

		Piston **301** **mm** (inch)	Cylinder **201** **mm** (inch)
SLS24	New dimension	11 (0,433)	69 (2,717)
	Minimum wear dimension acceptable	8 (0,315)	66 (2,598)
SLS36	New dimension	11 (0,433)	97,5 (3,839)
	Minimum wear dimension acceptable	8 (0,315)	94,5 (3,720)

As changes in the pump's efficiency depend on the conditions of use (pressure, rotation speed, liquid pumped, etc.), MOUVEX recommends that users define the monitoring ranges and the preventive maintenance schedule according to their own experience.

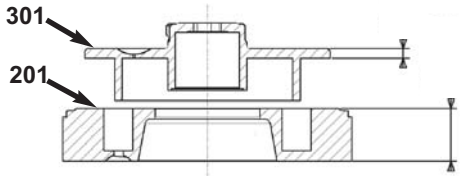

When controlling the piston and even if it has not reached its minimum dimensions, it may show following aspects, especially on abrasive liquid pumping or low viscosity :

- Triangular shape on top of piston wall (A),
- Small steps at piston wall base (B).

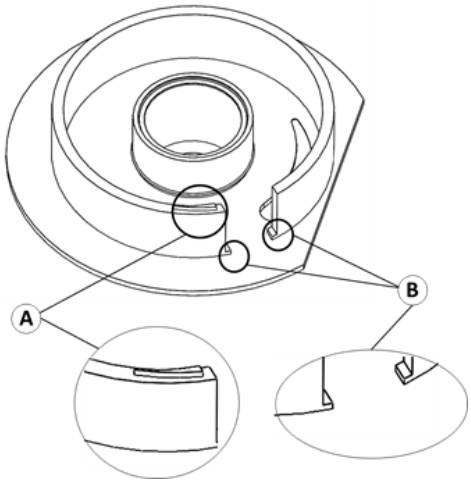

Before putting back the piston on the pump, eliminate these asperities by filing and finishing with fine sandpaper (No 320 grain or equivalent), taking care of not scratching any other surface around. Piston must then look as follows :

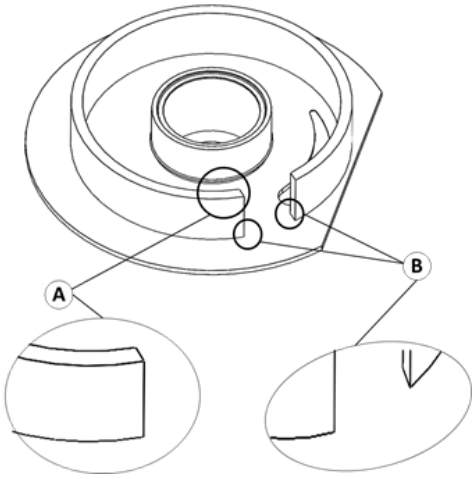

<u>Do not retouch any other surface of the piston</u> by any mean as it can degrade pump performance and reliability. In particular, do not round or attenuate disc wall edges.

Even if it shows wearing signs, <u>do not retouch any surface of the cylinder</u> by any mean as it can degrade pump performance and reliability.

7. ASSEMBLY OF CYLINDER/PISTON

- Check the state of the seals **205**, **305**, **306**, **113** and replace them if necessary.
- Position the seal **113** on the large flange and the seal **306** on the hub.

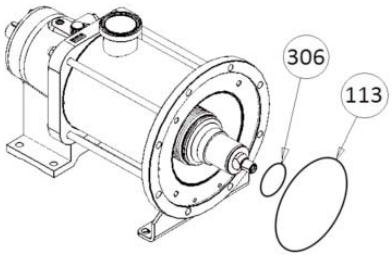

- Engage the piston **301** with the cylinder **201**, the slot of the piston being opposite the partition of the cylinder. Position the cylinder/piston unit **201/301** so that the recess of cylinder **201** faces positioning pin **118**.
- Engage the cylinder/piston unit **201/301** on hub **596** (to make work easier, position hub **596** upwards) then push home making sure that the oblong hole of the piston engages within the 2 flat surfaces of the end of the hub **596**.

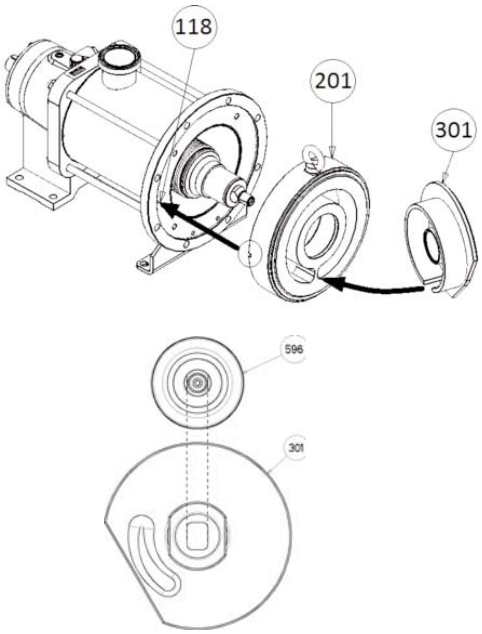

- Place thread locking adhesive (Loctite® 243* or equivalent) on the thread of the transmission hub **596**.

WARNING	
	BE CAREFUL WITH THE WEIGHT OF THE PARTS WHEN THEY ARE BEING REMOVED.
The weight ot the parts can be dangerous and may provoke bodily injuries or material damages.	

- Hold the piston **301** with a 85 Open-end spanner or a monkey wrench and screw-up the nut **304** after mounting the seal **305** on to the rear face (M24 : 200 Nm).

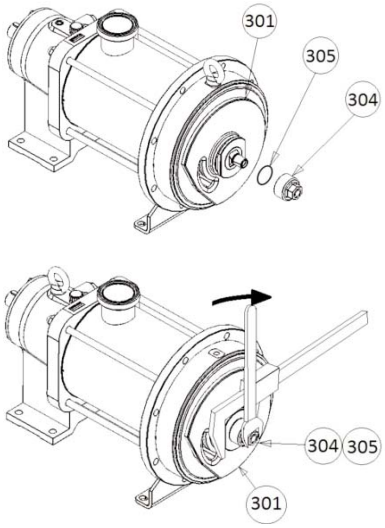

It is important to keep a good grip on the piston; its rotation could lead to deterioration of the bellows.

- Re-mount the outlet tube **402** with its 2 seals **205**.

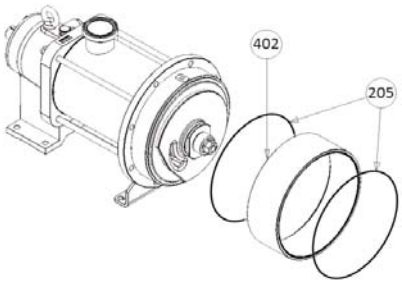

- Re-mount the front cover **401** while positionning the outlet port desired.
- Position the tierods **107** and screw up the 8 nuts **106** (8 x M16 assembly torque 100 Nm).

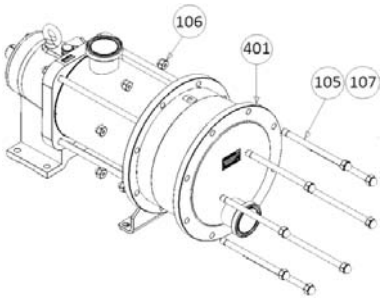

* Loctite® is a registered trademark.

8. PROTECTION OF THE BELLOWS

WARNING	
The weight ot the parts can be dangerous and may provoke bodily injuries or material damages.	BE CAREFUL WITH THE WEIGHT OF THE PARTS WHEN THEY ARE BEING REMOVED.

- Dismantle the cylinder/piston couple (see corresponding §).
- Remove the 2 fixing screws from the base frame of the lug **108**.
- On the drive side, remove the 4 nuts **115**.

PUMP WITHOUT BELLOWS MONITORING SYSTEM

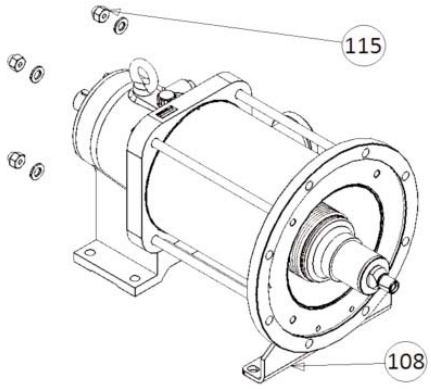

PUMP WITH BELLOWS MONITORING SYSTEM BY NON ATEX PRESSURE SWITCH

BE CAREFUL NOT TO HIT THE PRESSURE SWITCH AND THE CONNECTIONS.
DO NOT REMOVE THE PRESSURE SWITCH.
DO NOT REMOVE THE PROTECTION PLATE.

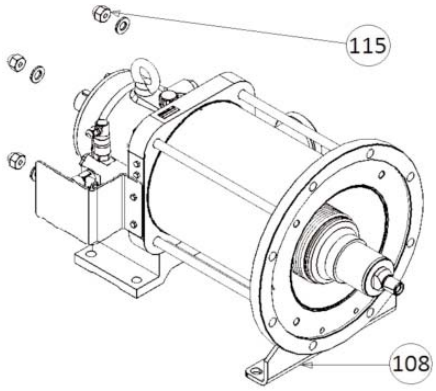

PUMP WITH BELLOWS MONITORING SYSTEM BY ATEX PRESSURE SWITCH

DO NOT HIT THE PRESSURE SWITCH AND THE CONNECTIONS.
DO NOT REMOVE THE PRESSURE SWITCH.
DO NOT UNCOUPLE THE HOSE BETWEEN PRESSURE SWITCH AND BEARING.
DO NOT REMOVE THE PROTECTION PLATE.

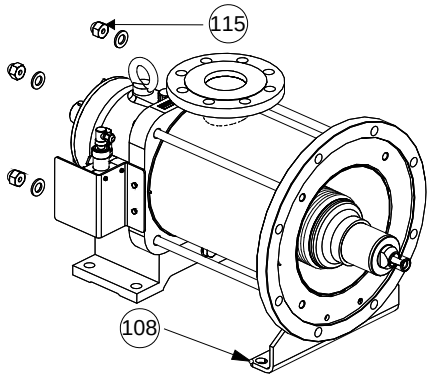

- With the help of a mallet, lightly tap the large flange **104** to free the tube **101B** from the transmission hub **596**.
- Remove the tube **101B while taking care of impact**.
- Remove the seal **113**.
- Inspect the bellows : any impact, scratch or distortion necessitates its replacement.

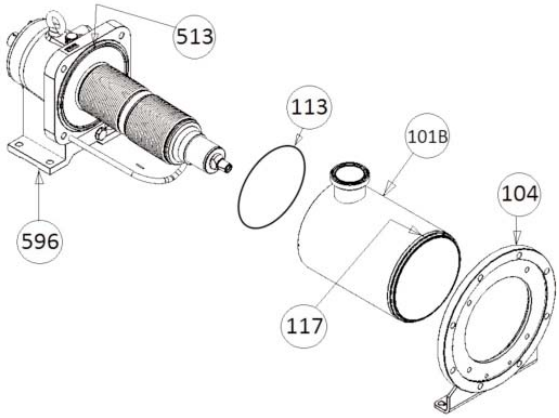

- Assembly is undertaken in the reverse order of dismantling, taking care to correctly position the seal **113** and the indexing pins **117** and **513**. The nuts **115** must be re-mounted with thread locking adhesive (Loctite® 243* or equivalent) :

  4 x M16 : Assembly torque 100 Nm.

* Loctite® is a registered trademark.

8. PROTECTION OF THE BELLOWS (continued)

The spare transmissions delivered are equipped with a tubular foam protection. We advise leaving this protection around the bellows until remounting of the piston and cylinder.

DO NOT FORGET TO REMOVE THE PROTECTION BEFORE MOUNTING THE CYLINDER.

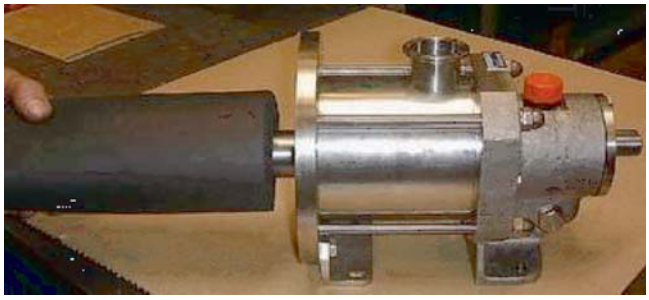

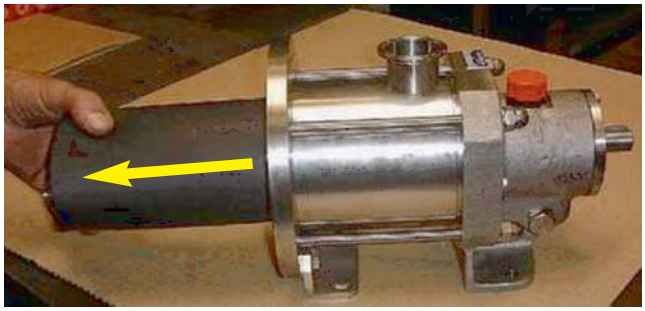

9. CHANGING THE LIP SEAL

CAUTION	
	THE PUMP LUBRICANT IS VERY SLIPPERY AND MAY CAUSE SERIOUS INJURY. ANY SPILLS MUST BE CLEANED UP.
Slippery lubricant. Spills should be cleaned up.	

- Drain the pump bearing (see § DRAINING OF BEARING).
- Unscrew the 3 screws **609**.
- Remove the cover **607** and the seal **602**.

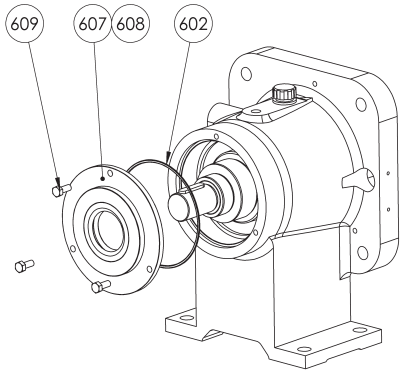

- Extract the 2 lip seals **608**.
- Fit 2 new seals **608**, one on each side of the cover, lip directed towards the interior of the transmission.

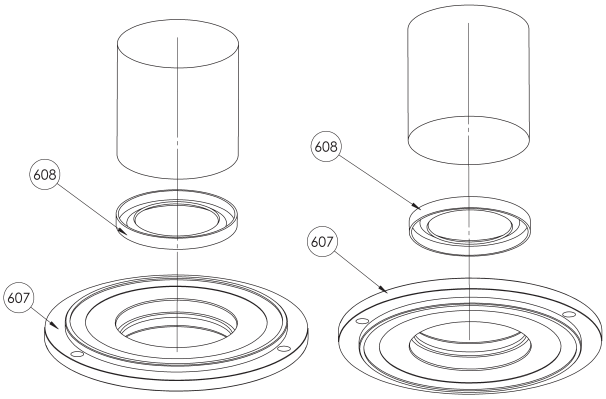

- If the seal face is marked, change the ring **507**. Break the ring with a chisel then fit a new ring after heating it at 90°C (in an oil bath or at HF).

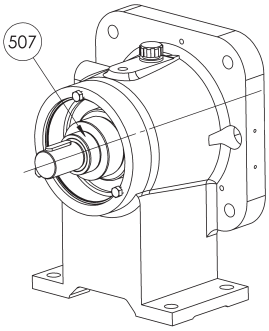

- Re-mount the cover **607** after placing the seal **602**, greasing the lips of the seals and greasing between the 2 seals **608**.

FOOD SYNTHETIC GREASE :
Compulsory reference because compatible with the standard MOUVEX bearing oil.

- After replacing the drain plug, fill the bearing with 4,5 litres of oil* (see § DRAINING OF BEARING).
- Screw back the breather **715**.

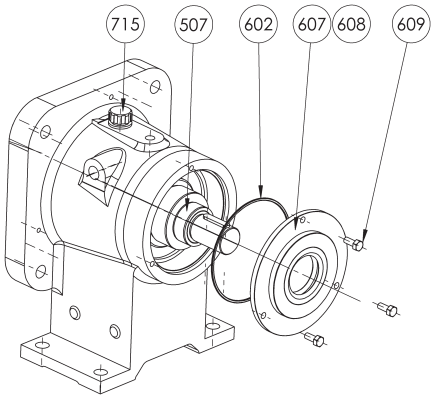

* **Standard oils provided by MOUVEX** (Safety data sheet is supplied on inquiry) :
CS05 Food synthetic oil
CS23 Silicone free oil for transmission

* **Other oil provided by customer.**

10. CHANGING THE ORIENTATION OF THE PORTS

WARNING	
	BE CAREFUL WITH THE WEIGHT OF THE PARTS WHEN THEY ARE BEING REMOVED.
The weight ot the parts can be dangerous and may provoke bodily injuries or material damages.	

10.1 Discharge port

- Unscrew the 8 nuts **106** and remove the 8 tierods **107**.
- Turn the front cover **401** so as to position the outlet port in the desired position.
- Replace the 8 tierods **107** and tighten the nuts **106**.
- Make sure that the seal **205** is secured in its housing. Secure it with a grease that is compatible with the transferred product if necessary.

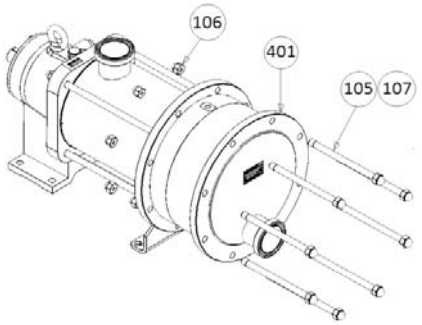

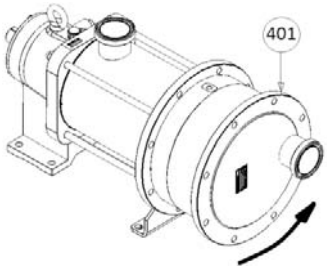

10.2 Suction port

- Dismantle the main body **101B** including the suction port as indicated in the corresponding §.
- Re-mount the main body **101B** in the desired position by fitting the indexing pins in the housings provided in the bearing **596** and the flange **104**.
- Make sure that the seal **113** is secured in its housing. Secure it with a grease that is compatible with the transferred product if necessary.

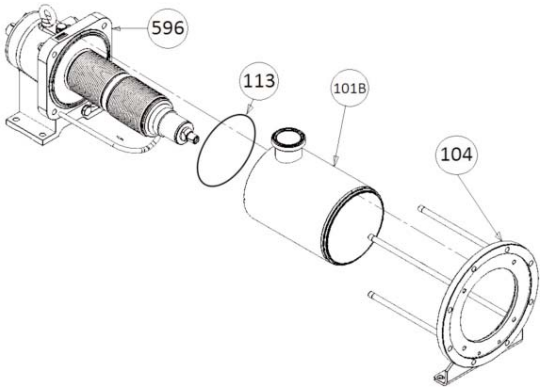

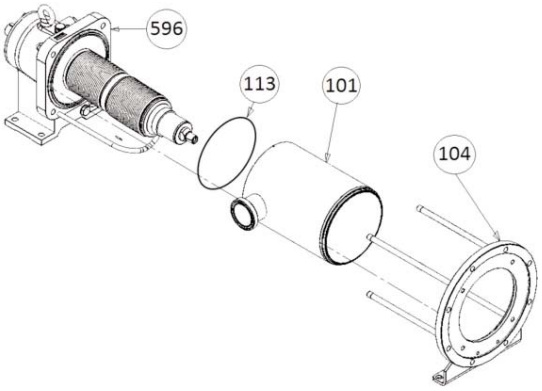

11. DRAINING OF BEARING

CAUTION	
Excessive temperature- can cause injury or severe damage.	THE SURFACES OF THE PUMP AND OIL TRANSMISSION CAN BE AT A TEMPERATURE LIABLE TO CAUSE INJURY OR SEsevere DAMAGE.

CAUTION	
Slippery lubricant. Spills should be cleaned up.	THE PUMP LUBRICANT IS VERY SLIPPERY AND MAY CAUSE SERIOUS INJURY. ANY SPILLS MUST BE CLEANED UP.

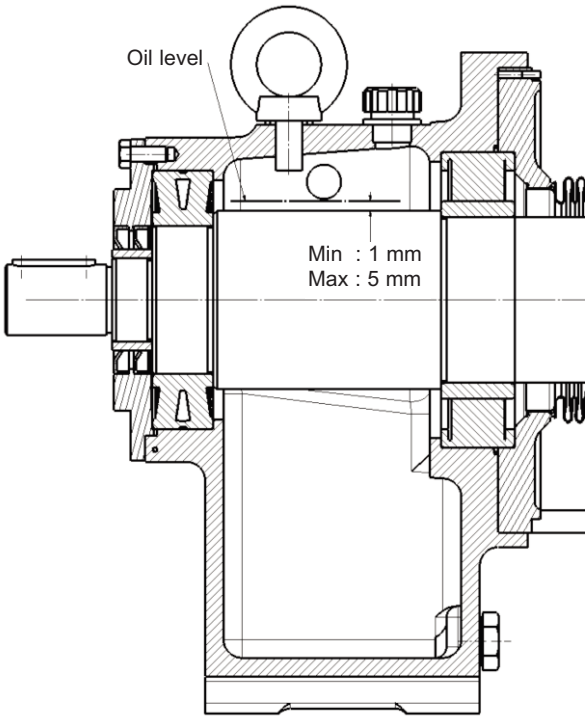

- Drain the transmission following the board below :
  - Data with **MOUVEX Standard oil CS05* :**

Temperature of product pumped / heating product	Draining interval (running hours)
80 °C < T ≤100 °C	12 000
T ≤ 80 °C	24 000

  - Data with **MOUVEX Silicone free oil CS23* :**

Temperature product pumped / heating product	Draining interval (running hours)
T < 100 °C	5 000

  - Data with **other customer oil** : the drawing interval is defined by the customer (tests results) regarding the oil specifications and the pump conditions.
- Drain the pump by removing the drain plug with its seal **773-774** and the breather **715**.
- Replace the drain plug and its seal.
- Fill the transmission with 4,5 litres of oil*.
- Check oil level that the level is between 1 and 5 mm above the shaft.
- Screw back the breather **715**.

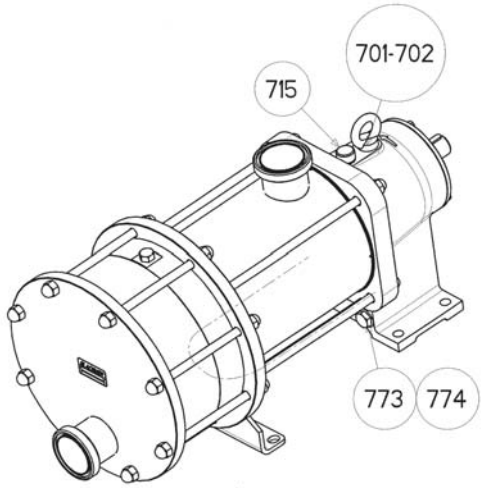

*** Standard oils provided by MOUVEX** (Safety data sheet is supplied on inquiry) :
CS05 Food synthetic oil
CS23 Silicone free oil for transmission

*** Other oil provided by customer.**

12. OPTIONS

12.1 Bellows monitoring system

See Instructions 1011-S00.

13. STORAGE

If necessary, refer to § MAINTENANCE for pump disassembly.

13.1 Short duration (≤ 1 month)

WARNING	IF PUMPING HAZARDOUS OR TOXIC FLUIDS, THE SYSTEM MUST BE FLUSHED PRIOR TO PERFORMING ANY SERVICE OPERATION.
Toxic or hazardous fluids can cause serious injury.	

MOUVEX pumps and motor-driven pumps are well lubricated when delivered to protect the internal parts during brief storage in a building where :

- the temperature remains between 10°C and 50°C.
- the relative humidity does not exceed 60%.
- exposure to vibration is limited.
- pump is stored in an area sheltered from bad weather and sun.

13.2 Long duration (> 1 month)

The recommendations from the manufacturer should be followed if the pump is stored with its gear motor.

Pump ports should be filled with a non-corrosive liquid that it compatible with the pump components in order to prevent corrosion.

Unpainted external surfaces of the pump (e.g. shafts, couplings, etc.) should be covered in some form of anti-corrosion protection.

If storage was made after a period of operation, the transmission oil must be replaced before storage (see § DRAINING).

The transmission will be filled with oil at breather level (see § DRAINING).

If pump storage lasted more than one year, the oil should be replaced in time to prevent an excessive degradation of its qualities.

The best storage conditions are inside a building that meets the conditions set out above.

If inside storage is not possible, the materials should be covered to prevent direct exposure to sun and bad weather. This protection should also prevent condensation.

The pump should be turned a few revolutions manually every two months.

13.3 Restarting

Follow the standard start-up procedure for the pump/motor-driven pump, as well as the instructions below.

Turn the pump by hand to make sure the parts move freely.

If the storage duration has exceeded one year, replace the oil transmission (see § DRAINING for removal instructions).

If the pump has a safety bypass, remove it and inspect the parts and make sure they move freely.

In all cases, the oil should be replaced after more than two years after its commissioning.

14. TROUBLESHOOTING

ZERO OR INSUFFICIENT FLOW			
1			**PRELIMINARY CHECKS**
	1-1		Make sure that the plastic plugs have been taken away from the ports of the pump and that the pump is running (defective drive, damaged motor, etc., faulty transmission : broken coupling, sliding belt, worn or poorly coupled clutch, etc.).
	1-2		Make sure that the pump rotates in the correct direction corresponding to the direction in which the liquid circulates in the installation (cf. the pump plate). If necessary, change the electric motor connections.
	1-3		Make sure that the pump rotation speed is sufficient. Determine this by checking the speed of the pump motor (see motor plate) and the speed reduction ratio (see reduction gearbox plate) or use a rev. counter.
			If these checks do not highlight the problem :
2			**MEASURE THE DISCHARGE PRESSURE** (as close to the outlet of the pump as possible, with a minimum distance of 5 pipe diameters).
	2-1		If the pressure is lower than the figures given for the material, or null, this could be due to :
		2-1-1	The pump is worn, this will also affect the suction capacity of the pump (cf 3-2-2 b).
3			**MEASURING THE VACUUM PRESSURE** (as close as possible to the pump inlet, inlet side).
	3-1		If the vacuum is high, e.g. higher than or equal to 6 to 7 metres WC (0.6 to 0.7 bara i.e. about 45 or 50 cm of mercury), this can result in pump noise. The cause could be :
		3-1-1	a. the suction lift is too high (reduce it by taking the pump down closer to the level of the liquid). b. the dynamic suction losses are too high : the inlet piping orifice is too close to the bottom of the tank.
		3-1-2	The inlet piping is completely blocked (valve, tap, filter, cloth, full seal forgotten, etc.)
		3-1-3	The liquid vapour pressure is too high (or has become too high following, for example, a change of temperature). Bring the pump closer to the level of the liquid, install the pump closer to the feed or cool the liquid to reduce the vapour pressure.
	3-2		If the vacuum is low, for example, less than 3 metres WC (i.e. about 20 cm of mercury), check for leaks on the inlet pipe, isolate the pump from the inlet piping (by closing the valve nearest the pump or by inserting a full flange seal) and measuring the vacuum once again.
		3-2-1	If the vacuum is high with the isolating valve closed on suction line, e.g. higher than or equal to 6 or 7 metres WC (i.e. about 45 to 50 cm of mercury), the pump is not the cause : a. there must be an air inlet upstream of the pump isolating valve. b. the liquid vapour pressure is or has become too elevated due to a change of temperature (cf 3-1-3).
		3-2-2	If the vacuum is low or non-existent, the reason could be : a. air is entering the pump (check the front cover seals, flanges, etc...) b. the pump is worn and the internal tightness is out of specification (the piston bushings are worn, worn piston and cylinder, broken piston wear compensation springs, worn partition, broken shaft).

ABNORMAL HEATING OF BEARINGS			
4			This heating can be caused by :
	4-1		- excessive tension in the transmission (belt or chain) on the pump shaft.
	4-2		- excessive pulling on the pump flanges by the piping (in this case, it must have been necessary to force the piping into position to connect it to the pump).
	4-3		- poor alignment of the pump - due for example to 4-2 (the pump is partially or totally uncoupled, the pump shaft and drive shaft are not aligned with each other).
	4-4		- inadequate anchoring of the pump unit leading to deformation of the chassis (make sure that the chassis is clear of the ground except for the 3 anchoring points).
ABNORMAL NOISES			
			These noises can be caused by hydraulic and mechanical sources. They can be distinguished by the fact that only the former disappear (or at least lessen) when air is allowed into the inlet pipe.
5			**HYDRAULIC NOISES**
			These noises can come from insufficient product being supplied to the pump, or :
	5-1		- the rotation speed is too high for the installation conditions (increase of viscosity due to a change of product or a reduction of temperature, etc.).
	5-2		- that the suction head is too high or has become too high due to excessive head losses following clogging of the piping or filter, a change of viscosity of the liquid, etc.,
	5-3		- an increase of the vapour pressure with a rise of temperature.
6			**MECHANICAL NOISES**
			These can stem from :
	6-1		- abnormal stress on the pump : the transmission is pulling on the shaft, pulling on the flanges by the piping.
	6-2		- a broken part or foreign body has entered the pump.
EXCESS POWER CONSUMPTION			
7			The most spectacular event occurs when the power to an electric motor is shut off.
	7-1		If this incident occurs when closing the discharge line, the cause may be the motor protection is adjusted too low or wrong circuit breaker have been fitted.
	7-2		If the incident occurs during operation, the cause could be : a. an inadequate motor (in this case, the discharge pressure complies with what was expected). b. head losses higher than expected - following higher viscosity or specific gravity than planned initially (in this case, the discharge pressure is higher than that planned. The pressure can be reduced by loosening the relief valve adjustment screw - the flow is decreased). c. excessive speed of rotation. d. a fault of the equipment (faulty alignment, deformation of the chassis, stress exerted by the piping on the flanges, seizing, etc.).
			Excessive consumption of electricity can also be due to a poor motor connection (e.g. a 3 phase motor operating on 2 phases).

15. CERTIFICATE OF CONFORMITY

DECLARATION UE DE CONFORMITE
EU CERTIFICATE OF CONFORMITY – EU KONFORMITÄTSERKLÄRUNG

MOUVEX sas, ZI La Plaine des Isles – 2 Rue des Caillottes – 89000 Auxerre France, déclare que l'équipement suivant / *declares the following equipment / erklärt, dass folgende Ausrüstung:*

Modèle :_____ **N° de série :**_____ (A) Répondant aux spécifications indiquées dans l'ARC N° : _____ (B)
Designation / Bezeichnung *Serial N° / Serien Nr* *According to the specifications recorded in the acknowledgment of order N°: Entsprechend den Spezifikationen aus AB-Nr :*

Pour la Sté MOUVEX sas, fait à Auxerre le : _____
For Mouvex sas company – Date :
Fur die Fa Mouvex sas - Datum :

Configuration : *Konfiguration*
☐ Pompe / Compresseur arbre nu *(Pump / Compressor « bare-shaft »)* *(Pumpe / Kompressor, freies Wellenende)*
☐ Groupe de pompage / de compression *(Pumping Unit / Compressor Unit)* *(Pumpen- / Kompressoraggregat)*

Type / *Geräteart* :
☐ Pompe à mvt excentré *(Eccentric Disc Pump /* Ringkolbenpumpe*)*
☐ Pompe péristaltique *(Peristaltic Pump /* Schlauchpumpe*)*
☐ Pompe centrifuge *(Centrifugal Pump /* Kreiselpumpe*)*
☐ Pompe à lobes *(Lobes Pump /* Drehkolbenpumpe*)*
☐ Pompe à palettes *(Vanes Pump /* Flügelzellenpumpe*)*
☐ Autre pompe *(Other Pump / Andere Pumpe)*

☐ Compresseur à Vis *(Screws compressor /* Schraubenverdichter*)*
☐ Compresseur à palettes *(Vanes compressor /* Flügelzellenverdichter*)*
☐ Refroidisseur Hydraulique *(Hydraulic oil cooler /* Hydraulikkühler*)*

Responsable Qualité Clients
Customer Quality Manager / Qualitätsbeauftragter

Est conforme aux dispositions suivantes :

☐ **Directive « MACHINES » 2006/42/CE** et aux législations nationales la transposant, portant sur les dispositifs de sécurité liés aux risques mécaniques et électriques applicables aux machines tournantes.

NF EN 809:2009 NF EN 1672-2:2009 NF EN ISO 13857:2008
NF EN 12162:2009

☐ **Directive « ATEX » 2014/34/UE** du 26 février 2014 et aux législations nationales la transposant, portant sur les appareils destinés à être utilisés en atmosphères explosibles. Conformité obtenue par application des normes :

NF EN 1127-1:1997 NF EN 13463-1:2009 NF EN 13463-5:2009

Certification ATEX délivrée par INERIS*, Organisme Certificateur, et portant le marquage suivant : (C)

Is in conformity with the provisions of the following Directive:

☐ ***« MACHINES » Directive 2006/42/EEC*** *as transposed by the national legislation, concerning safety equipments and arrangements relative to mechanical and electric risks applicable to rotative machines.*

NF EN 809:2009 NF EN 1672-2:2009 NF EN ISO 13857:2008
NF EN 12162:2009

☐ ***« ATEX » Directive 2014/34/EU*** *(26 Feb. 2014) as transposed by the national legislation, concerning equipment intended to be used in explosive atmospheres. Conformity obtained by application of the standards :*

NF EN 1127-1:1997 NF EN 13463-1:2009 NF EN 13463-5:2009

ATEX Certification delivered by INERIS, Notified Body, and with the following marking:* (C)

den Bestimmungen der nachstehenden Richtlinien entspricht:

☐ ***„Maschinen-Richtlinie" 2006/42/EEC*** *wie umgesetzt im nationalen Recht hinsichtlich der Ausrüstungssicherheit und Sicherheitsvorkehrungen bezogen auf mechanische und elektrische Risiken, die für rotierende Maschinen gelten.*

NF EN 809:2009 NF EN 1672-2:2009 NF EN ISO 13857:2008
NF EN 12162:2009

☐ ***„ATEX" Richtlinie 2014/34/EU*** *(26. Feb. 2014) wie umgesetzt im nationalen Recht in Bezug auf Ausrüstungen für den Einsatz in explosionsgefährdeter Atmosphäre. Die Konformität hat Geltung durch Anwendung folgender Normen:*

NF EN 1127-1:1997 NF EN 13463-1:2009 NF EN 13463-5:2009

Die ATEX-Zertifizierung wurde von der benannten Stelle INERIS erteilt, und mit folgender Kennzeichnung: (C)*

II __ G ____ II __ – T __ **Temp Max produit pompé / *Max Temp Flow / Max. T° Medium* = _____ °C** (X = voir notice / see IOM / siehe Handbuch)

L'équipement désigné ci-dessus doit impérativement respecter les conditions d'utilisation ATEX décrites dans nos notices d'instruction. Il doit être employé conformément à l'utilisation qui en a été prévue de par sa conception et sa fabrication, et conformément aux normes en vigueur.

Nous, soussignés, déclarons que l'équipement concerné est conforme aux Directives listées ci-dessus et aux normes applicables s'y rapportant.

The equipment indicated above must imperatively comply with the ATEX conditions of use described in our Instruction book. It must be used according to the foreseen use by its design and its manufacturing, and according to the current standards.

We, undersigned, declare that the concerned equipment is in conformity with the Directives listed above and in the applicable standards in force.

Oben stehend bezeichnete Ausrüstung muss unbedingt den in unseren Betriebsanleitungen beschriebenen ATEX Anwendungs-bedingungen entsprechen. Sie ist entsprechend dem durch Konstruktion und Fabrikation vorgesehenen Verwendungszweck und entsprechend den geltenden Normen einzusetzen.

Die Unterzeichner erklären, dass die bezeichnete Ausrüstung den oben aufgeführten Richtlinien und den diesbezüglich geltenden Normen entspricht.

SPECIMEN

CTRL.D025 – rév.04 du 25/05/2016 – Déclaration de conformité CE-Atex

** (INERIS – Parc Techno Atala – 60550 Verneuil-en-Halatte – France).*