MOUVEX

Spec Sheet 1003-001 E
Section: **1001**
Effective: **June 2015**
Replaces: **February 2009**

A Series
Eccentric Disc Pump

Exceptional Self-Priming Capabilities

The design of the A-Series pumps, utilizes an eccentric disc according to the Mouvex principle, this enables self-priming, even when dry, and pipe clearing.

Legendary ruggedness

The A Series pumps maintain their initial performance level over time without any adjustment thanks to the automatic clearance make-up system.

Unchanging characteristics

Even if the viscosity of the fluid changes considerably, the A Series pumps maintain a regular and constant output, independent of the delivery pressure.

Practically unlimited scope of application

A Series pumps are perfectly adapted to the transfer of fluid whether it be viscous, non lubricating, volatile or delicate (no shear effect).

Options

- Double bypass for protection when operating in both directions.
- Heating or cold jacket for transferring products that can solidify at ambient temperature.

MOUVEX A SERIES PUMP 50 years 1965-2015

PROVEN PERFORMANCE

ATEX certified
II 2 G II B T2, T3, T4, T5
(according to pumped product temperature)

Can run dry in ATEX environment.

Flow rates up to 55 m³/h (242 gpm)

A Series
Eccentric Disc Pump

Reversibility

The unique design of the A Series pump allows the unit to be continually run in reverse. This enables pumping back of products.

Excellent efficiency

The unique eccentric disc principle ensures a smooth transfer (low rotary speeds) as well as excellent efficiency.

Construction

Casing: Ductile iron

Bushing: Carbon or bronze (5 bar max.)

O-rings:
- FKM
- FEP-FKM

Mouvex Mechanical Seals:
- Carbon / stainless steel
- Tungsten carbide / tungsten carbide

Standardized Mechanical Seals:
- According to manufacturer

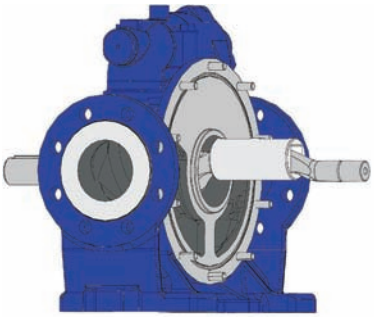

Pump Body

Single-piece Cylinder

Disc

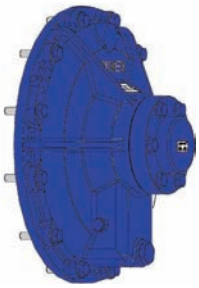

End Plate

Mouvex Technology

Eccentric disc pumps consist of a cylinder and pumping element mounted on an eccentric shaft. As the eccentric shaft is rotated, the pumping element forms chambers within the cylinder, which increase in size at the intake port, drawing fluid into the pumping chamber. The fluid is transported to the discharge port where the pumping chamber size is decreased. This action squeezes the fluid out into the discharge piping.

Mouvex Principle

1 2 3 4 5

Applications

Since 1965, these workhorse transfer pumps have earned a strong reputation in some of the harshest applications in the world. Now, these pumps have expanded their capabilities to serve more markets and a wider range of industrial applications:

- **Energy:** Fuels, Gasoline, Diesel, Jet, Avgas, LFO, HFO, Biodiesel, Bioethanol, Lubricants, Mineral and Synthetic oils, Greases
- **Chemical Industry:** Paint, Varnishes, Solvents, Resins, Methanol, Ethanol, Additives, Various chemicals
- **Food Industry:** Cooking oils, Animal fats, Vegetable fats, Cocoa butter, Molasses, Alcohols

Performance Data

		AZ	AD	A6	A12	A18	A31	A55
Maximum flow rate	m^3/h	1.2	2.3	5.7	11.7	18	31	55
	gpm	5.28	10.13	25	51.5	79.25	136	242
Maximum differential pressure	bar	5	5	10	10	10	10	10
	psi	72.5	72.5	145	145	145	145	145
Maximum temperature	°C	150						
	°F	302						

AZ and AD

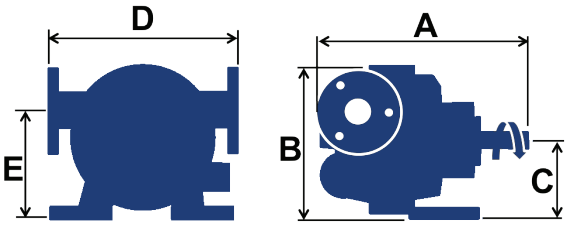

A6, A12, A18, A31, and A55

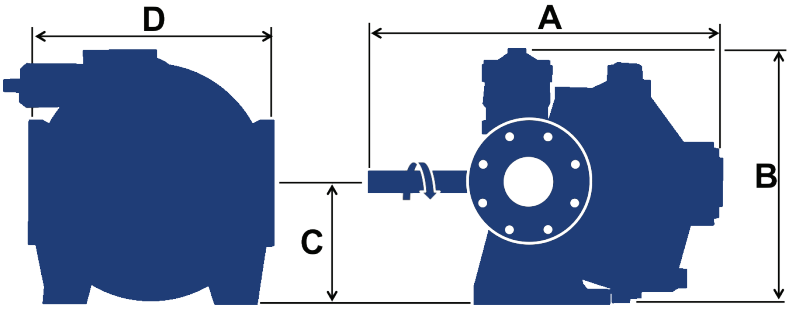

Dimensions

Pump	A mm (in)	B mm (in)	C mm (in)	D [1] mm (in)	D [2] mm (in)	E mm (in)	Maximum Weight kg (lbs)	Mouvex Flanges		ISOPN16 Flanges		ANSI150 Flanges	
AZ	175 (6.89)	120 (4.72)	65 (2.56)	156 (6.14)	—	88 (3.46)	5 (11.1)	DN20	3/4"	—	—	—	—
AD	240 (9.45)	195 (7.68)	105 (4.14)	200 (7.87)	—	137 (5.39)	15 (33.07)	DN32	1 1/4"	—	—	—	—
A6	306.5 (12.07)	249 (9.8)	110 (4.33)	240 (9.45)	252 (9.92)	—	24 (53)	DN40	1 1/2"	DN40	1 1/2"	DN40	1 1/2"
A12	364 (14.33)	347 (13.66)	140 (5.51)	300 (11.81)	306 (12.05)	—	49 (108)	DN50	2"	DN50	2"	DN50	2"
A18	421 (16.56)	372 (14.65)	165 (6.5)	366 (14.41)	366 (14.41)	—	65 (143)	DN65	2 1/2"	DN65	2 1/2"	DN65	2 1/2"
A31	565 (22.25)	400 (15.75)	185 (7.28)	390 (15.36)	392 (15.43)	—	98 (216)	DN80	3"	DN80	3"	DN80	3"
A55	570 (22.44)	475 (18.7)	225 (8.86)	450 (17.72)	458 (18.03)	—	150 (331)	DN100	4"	DN100	4"	DN100	4"

[1] With flanges compatible with old A series pumps

[2] With ISOPN16 or ANSI150 flanges

Дистрибутор:
България, София 1528, ул."Поручик Неделчо Бончев" 3, ет.5
+359 2 973 27 67, +359 2 973 2370; office_bg@opwmarket.com