Blackmer®

IOM

Installation
Operation
Maintenance
Manual

S SERIES

Twin Screw WTG Pumps

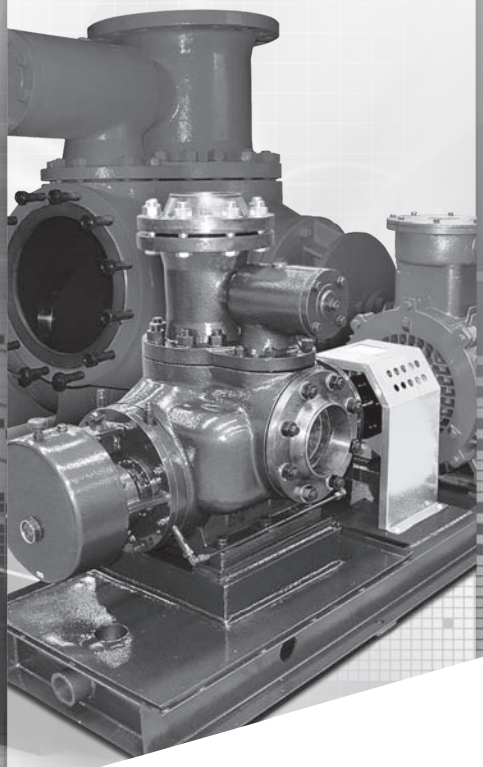

Where Innovation Flows

PSG®
a DOVER company

blackmer.com

TABLE OF CONTENTS

SECTION 1 **INTRODUCTION** 1
FOREWORD 1
SAFETY PRECAUTIONS 2

SECTION 2 **PUMP FUNCTIONALITY** 3
PUMP FUNCTIONALITY 3
PRESSURE-LIMITING VALVE 3
PUMP IDENTIFICATION 3

SECTION 3 **RECEIVING, HANDLING & STORAGE** 4
RECEIVING 4
LOADING AND UNLOADING. 4
STORAGE AND PRESERVATION. 4

SECTION 4 **INSTALLATION** 5
LOCATION 5
FOUNDATION 5
PIPING SYSTEM 6
PIPING SYSTEM ACCESSORIES 6
COUPLING ALIGNMENT.. 6
DOWELING. 7
LUBRICATION. 7
LUBRICATING GREASE.. 7
FLUSHING THE PUMP. 7

SECTION 5 **OPERATION** 8
PUMP PREPARATIONS 8
STARTING THE PUMP 8
RUNNING THE PUMP 8
STOPPING THE PUMP 8

SECTION 6 **TROUBLESHOOTING** 9

SECTION 7 **ROUTINE & PREVENTIVE MAINTENANCE** 10
DAILY MAINTENANCE 10
WEEKLY MAINTENANCE 10
QUARTERLY MAINTENANCE 10
ANNUAL MAINTENANCE 10

SECTION 8 **DISASSEMBLY & REASSEMBLY** 11

Blackmer pump manuals and parts lists may be obtained from Blackmer's website (www.blackmer.com) or by contacting Blackmer Customer Service.

FOREWORD

This manual is intended to assist those who are involved with the installation, operation and maintenance of a Blackmer S Series Pump. These instructions must be thoroughly reviewed in their entirety and fully understood prior to pump installation, operation or maintenance. Special attention should be given to pump lubrication, heating, cooling and sealing during pump installation, operation and maintenance.

Blackmer S Series Pumps include 2H, 2HE, 2HM, 2HR, 2HC, 2HH, 2MPS, 2VE and 2VM models.

This is a SAFETY ALERT SYMBOL.

When you see this symbol on the product, or in the manual, look for one of the following signal words and be alert to the potential for personal injury, death or major property damage.

DANGER — **Warns of hazards that WILL cause serious personal injury, death or major property damage.**

WARNING — **Warns of hazards that CAN cause serious personal injury, death or major property damage.**

CAUTION — **Warns of hazards that CAN cause personal injury or property damage.**

NOTICE:
Indicates special instructions which are very important and must be followed.

NOTICE:

Blackmer Power Pumps **MUST** only be installed in systems, which have been designed by qualified engineering personnel. The system **MUST** conform to all applicable local and national regulations and safety standards.

This manual is intended to assist in the installation and operation of Blackmer Power pumps, and **MUST** be kept with the pump.

Pump service shall be performed by qualified technicians **ONLY**. Service shall conform to all applicable local and national regulations and safety standards.

Thoroughly review this manual, all instructions and hazard warnings, **BEFORE** performing any work on the pump.

Maintain **ALL** system and pump operation and hazard warning decals.

WARNING

Hazardous pressure can cause personal injury or property damage.

Disconnecting fluid or pressure containment components during pump operation can cause serious personal injury, death or major property damage.

WARNING

Hazardous voltage. Can shock, burn or cause death.

Failure to disconnect and lockout electrical power before attempting maintenance can cause shock, burns or death.

WARNING

Hazardous machinery can cause serious personal injury.

Failure to disconnect and lockout electrical power or engine drive before attempting maintenance can cause severe personal injury or death.

WARNING

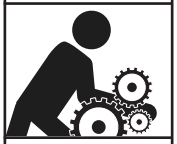

Do not operate without guard in place.

Operation without guards in place can cause serious personal injury, major property damage, or death.

WARNING

Hazardous or toxic fluids can cause serious injury.

If pumping hazardous or toxic fluids, system must be flushed and decontaminated, inside and out, prior to performing service or maintenance.

WARNING

Hazardous pressure can cause personal injury or property damage.

Failure to relieve system pressure prior to performing pump service or maintenance can cause serious personal injury or property damage.

CAUTION

Heavy assemblies can cause personal injury or property damage.

Always use a lifting device capable of supporting the full weight of the pump assemblies.

NOTICE:
Maintenance shall be performed by qualified technicians only, following the appropriate procedures and warnings as presented in this manual.

SAFETY PRECAUTIONS

This manual contains basic references that are to be observed during pump transportation, installation, operation and maintenance, and, therefore, should be kept as part of the permanent pump records and readily accessible as a reference to any person working or maintaining the pumping unit.

The instructions within this manual must be thoroughly reviewed in their entirety and fully understood prior to pump installation, operation or maintenance care.

These pumps have been designed for safe and reliable operation when properly used and maintained in accordance with the instructions contained within this manual. A pump is a pressure-containing device with rotating parts that can be hazardous. Failure to read and comply with installation, operation and maintenance instructions will void the responsibility of the manufacturer and may result in bodily injury or equipment damage.

Markings and Instructions on Pump Unit

Instructional references regarding direction of rotation, fluid-flow orientation, safety warning, etc., are clearly marked on the pump. Please observe and follow all indicated safety markings and instructions.

Failure to observe safety references can result in the following:

- Equipment failure
- Maintenance and service policies voided
- Environmental pollution due to hazardous substance leakage
- Personal endangerment as a result of electrical, mechanical and chemical influences

Qualified Personnel & Training

All persons installing, operating, maintaining and inspecting the pumping unit must have the required qualifications for work to be performed. All instructions and safety markings must be observed, understood and adhered to by all personnel working on or around the pumping unit. If installation or operational knowledge is inadequate, training must be provided. The scope of the personal responsibilities, competency and supervisory duties must be closely controlled by the purchaser of the pumping unit.

Safety Guidelines

All work performed on or around the pumping unit must be completed by qualified personnel.

- Machine components that are either hot or cold must be protected on-site to prevent personal endangerment.
- The pump must be stopped and power locked out before performing any maintenance.
- Safety markings on the pumping unit must not be removed.
- Leakage of hazardous media (i.e., toxic, flammable, explosive, etc.) must be collected in a way that no damage to personnel or environment occurs.
- If the pumped media is explosive, toxic or flammable, a warning or alarm device must be installed, pump housing must be well ventilated and the operating site must be a no smoke/fire zone.
- To prevent damage due to electricity, all electrical devices must be safely protected, functional and controlled.

Pump must meet specified operating parameters

Unless there is written permission by Blackmer, the pump must not be operated at higher parameters than specified. Adhering to these specifications is meant to prevent danger to persons and damage to equipment.

Pump Monitoring

Suitable measuring devices must be installed to inspect and control the pump during operation. Generally, pressure gauges are to be installed on suction and discharge lines near the pump.

NOTE: A Pressure Relief Valve (external bypass valve) must be installed in the discharge pipe of the pump.

PUMP FUNCTIONALITY

Blackmer S Series Pumps are rotary, positive displacement pumps capable of handing various clean liquids containing no solids. The pump is composed of two opposing sets of screws. During pump operation, the screws located on the two shafts are engaged and therein form a sealed cavity with the surrounding pump casing. The pumped liquid is displaced axially as the screw shaft turns steadily and constantly, allowing liquid to flow to the center of the pump where the discharge port is located. Hydraulic force on the two screws is both opposite and equal, allowing for hydraulic axial stress on the screw shafts to be automatically balanced.

The liquid suction of the pump is specially designed to ensure consistent liquid flow rate at uniform speed and lower resistance losses. The pump has a relatively low NPSHr value and, therefore, has a strong suction capability. The suction and discharge of the pump are located at the sides of the pump body or top of the body. This ensures that when the pump stops, enough media is kept in the pump body for strong self-prime capability.

Separate screw-shaft construction is adaptable according to pump application intentions. The shafts are made of high-strength alloy steel for greater strength while subject to higher power and torque requirements. Various screw-material options are available in order to meet any special application requirements.

Separately lubricated timing gears are used to transmit power from the driving shaft to the idler shaft and to prevent metal contact between the meshed, rotating screws, thereby increasing the life expectancy of both the screws and shafts.

PRESSURE LIMITING VALVE

Blackmer S Series pumps are equipped with a pressure limiting valve to prevent excess pressure build up. The starting pressure of the pressure limiting valve is typically 1.5 bar (21.8 psi) higher than the rated working pressure of the pump. If the discharge pipe is restricted or shut-off, the pressure of the pump will build rapidly and the pressure limiting valve will open. If the discharge pipe is restricted for a long period of time the temperature of the media will rise, possibly damaging the pump.

When operating the pump, all valves in the discharge pipe must be open. The pressure limiting valve on the pump cannot be used to control the flow or pressure.

NOTICE: The pump pressure-limiting valve is designed to protect the pump from excessive pressure and must not be used as a system pressure control valve.

PUMP IDENTIFICATION

A pump Identification tag, containing the pump serial number, I.D. number, and model designation, is attached to each pump. It is recommended that the data from this tag be recorded and filed for future reference. If replacement parts are needed, or if information pertaining to the pump is required, this data must be furnished to a Blackmer representative.

TECHNICAL DATA*

	2HM/2VM	2HE/2VE	2HR	2HC
Maximum Pump Speed	1800 rpm	1800 rpm	1800 rpm	1800 rpm
Maximum Operating Temperature	245˚F (120˚C)	176˚F (80˚C)	752˚F (400˚C)	248˚F (120˚C)
Maximum Differential Pressure	362 psi (25 bar)	362 psi (25 bar)	362 psi (25 bar)	232 psi (16 bar)

** Technical Data is for standard materials of construction.*
Consult Blackmer Material Specs for optional materials of construction.

INITIAL PUMP START-UP INFORMATION

Model No._____

Serial No._____

ID No. _____

Date of Installation: _____

Inlet Gauge Reading: _____

Discharge Gauge Reading: _____

Flow Rate: _____

RECEIVING

Place equipment in a controlled environment upon receipt.

Ordinary packing crates for the pump are not suitable to withstand outdoor storage conditions beyond a 30-day limit from date of delivery, not withstanding favorable/ unfavorable outdoor conditions. Improper storage can damage the equipment, thus voiding product warranty.

Special long-term storage packing can be supplied by Blackmer upon request.

It is at the client's discretion to observe and relate the packing and storage requirements in the Technological Agreement with Blackmer.

Parts and quality checkpoint.

Upon receipt of shipment, carefully check the pump, driver, spare parts, accessories and documentation in accordance with the supplied Packing List to ensure no components are missing or damaged. The identity of any missing or damaged components must be communicated to the carrier and Blackmer. Damage claims should be made at the time of the receipt and check.

LOADING AND UNLOADING

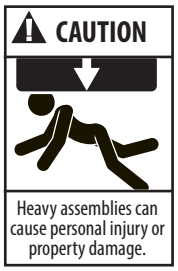

1. For transportation purposes, use suitable lifting tools and attach lifting hooks to places marked on packing. Strictly observe applicable safety regulations for lifting heavy loads.

   NOTE: Do not lift pump by bearing housing.

2. When lifting the pump, attach lifting hooks to outlet flanges as seen in Figure 1.

3. When lifting the pumping unit (motor included), chain should be attached to the hook of the base-plate. Make sure that no pipes or attached auxiliaries are damaged. See Figure 2 for reference.

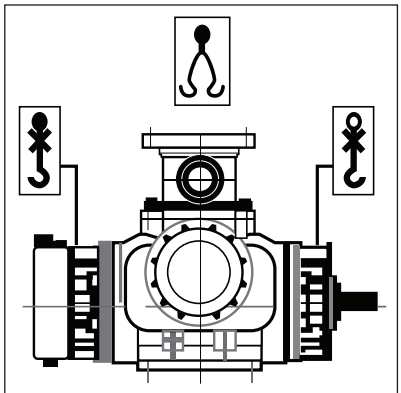

FIGURE 1 PUMP LIFTING

STORAGE AND PRESERVATION

Pump units are affixed to the skids on the inside of the packing crates in order to help prevent damage from standard loading and unloading. All pump openings are covered with blank flanges or special protective caps to keep pump cavity clean and free of debris.

If pump is not to be installed or operated immediately, or if pump is to be installed, but not operated immediately, the pump units must be preserved as indicated below:

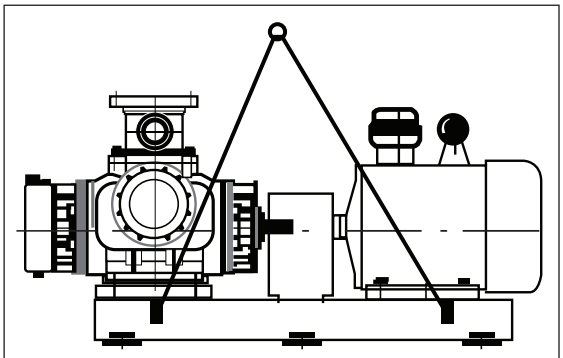

FIGURE 2 UNIT LIFTING

1. Store in a clean and dry location.
2. Apply acid and resin-free grease to all internal parts of the pump.
3. Ensure blank flanges or special protective caps covering pump openings are properly attached.
4. Coat preservatives on all exposed shaft elements and places that are not protected by paint.
5. Cover the pump and driver with plastic or waterproof canvas.

The following installation instructions are to assist in the proper pump installation. Trouble-free operation of a pump begins with proper installation practices and will also extend the life of your pump. Should any questions arise during the installation process, please contact the Blackmer Technological Service Department for assistance.

NOTICE:

Blackmer power pumps must only be installed in systems designed by qualified engineering personnel. System design must conform with all applicable regulations and codes and provide warning of all system hazards.

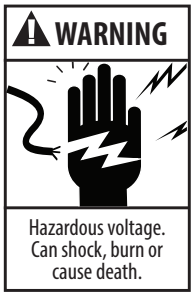

- Install, ground and wire to local and National Electrical Code requirements.
- Install an all-leg disconnect switch near the unit motor.
- Disconnect and lockout electrical power before installation or service.
- Electrical supply **MUST** match motor nameplate specifications.
- Motors equipped with thermal protection automatically disconnect motor electrical circuit when overload exists. Motor can start unexpectedly and without warning.

PRE-INSTALLATION CLEANING NOTICE:

New pumps contain residual test fluid and rust inhibitor. If necessary, flush pump prior to use. Foreign matter entering the pump **WILL** cause extensive damage. The supply tank and intake piping **MUST** be cleaned and flushed prior to pump installation and operation.

LOCATION

The pump has been built to meet the requirements of a specific capacity at a specific pressure. To meet these requirements, consideration must be taken regarding the suction and discharge sides of the pump during installation. This information must be provided to Blackmer engineers by the purchaser and specified according to the pre-planned location of the pump installation site. If, after receipt, the location of the pump is changed and these pre-planned conditions are altered, please consult Blackmer engineers immediately to ensure safe operation of the pump.

An appropriate amount of space must be kept for laying the pump foundation. This is a critical pre-condition for pump assembly and disassembly, installation, operation and maintenance.

It is suggested to locate the pump as close as possible to the source of the media supply. Ideally, the pump location should be clean and dry with enough space to perform the installation, maintenance and preservation.

NOTE: If it is necessary to install the pump in a pit or cavity, measurements must be taken and considered in an effort to prevent flooding or any other foreseeable challenge to the installation, maintenance or preservation of the pump.

FOUNDATION

Ground foundation should be suitable to absorb vibration and provide rigid support for the entire pump unit. Generally, reinforced concrete is used as a foundation material.

Pour the liquid cement and sand to fill the space underneath the base-plate. Mix the liquid through the pouring-hole on the base-plate to remove any air in the liquid.

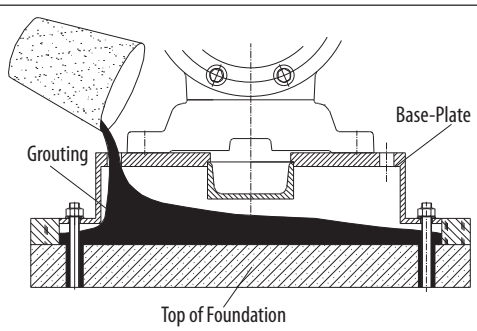

FIGURE 3 GROUTING

The required area of the pump location and the location of anchor (foundation) bolts can be defined accordingly to the pump unit outline designation drawing supplied by Blackmer.

The proper measurement should be carried out to locate and hold the anchor (foundation) bolts in the correct place while directly pouring the concrete. Each bolt should be installed in a pipe sleeve. The pipe sleeve's inside diameter should be approximately three to four times that of the outside diameter of the anchor bolt. Two methods are commonly used to secure and prevent bolts from turning (see Figure 3).

Option A: Weld a lug to the anchor bolt head to prevent bolt turning (see Figure 4).

Option B: The bolt may be a rod construction, bent at 90 degrees below the pipe sleeve. Pack the space between the anchor bolt and the sleeve to prevent concrete or grout form entering this area. Anchor (foundation) bolts must be long enough to allow 20 mm to 40 mm (0.79 in to 1.58 in) of space for grouting under the base-plate. When pump is level, the bolts should extend 6 mm to 10 mm (0.24 in to 0.4 in) through the screw nuts.

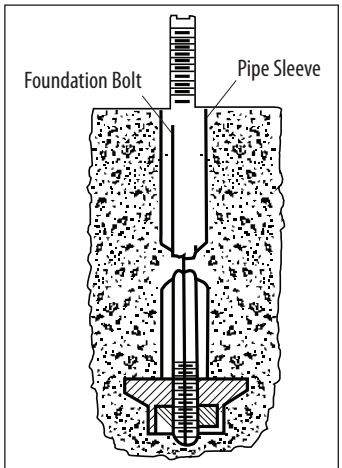

FIGURE 4 FOUNDATION

If the pump unit needs to be installed on a steel deck plate or another structure, directly install the pump unit on the surface or install as close as possible to the main structural parts, roof beams or main walls. Support is needed to maintain the concentricity of the pump and motor and to prevent damage caused by structures or base-plates being out of shape.

PIPING SYSTEM

Since the pump's basic operating parts are designed to be affixed on the two screws, extremely close running clearances exist between the screws and the body; therefore, it is very important to have the piping (especially the suction-side piping) cleaned thoroughly before connecting the piping to the pump flanges.

After the pump unit has been installed and secured on its foundation, pipe connections may be installed.

NOTE: Please see pump outline drawing for location of all pipe connections, flange sizes and other notes pertinent to piping. Pipes should be as short and direct as possible. Use long radius elbows to change direction when needed.

When laying the suction and discharge piping and other supply lines, there must be at least 1.2 times the overall pump length (without drive unit) in front of the gear casing of the pump.

Suction piping must be at least the same size of the inlet diameter; it is acceptable if the suction pipes are one class larger than the inlet. For example, if the size of the inlet is 150 mm (6 in), the suction pipes should be 200 mm (8 in). The pipe diameter [length of pipe should be four (4x) times that of the pipe's diameter] is used to connect the suction pipes and the inlet. Discharge piping should be the same size as the diameter of the outlet.

All major piping parts, including suction pipes, discharge pipes, valves and strainers, should be supported independently and installed properly to avoid any unnecessary strain on the pump. The piping flanges must be properly aligned with the pump flanges. To check alignment, insert flange bolts through the pipe and pump flange. If bolts are easily moved within the bolt holes and if flange faces are parallel with each other, the piping is properly aligned.

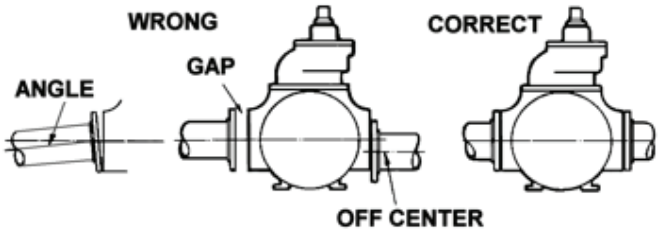

All the valves and filters on the suction pipes and discharge pipes shall be supported independently and secured to avoid transmitting the stress to the pump body. The flange of the pipes shall be straightly facing the flanges on the pump. Check the alignment between the pipes and ports by looking at the through holes on the pipe flanges and port flanges. If the bolts can move freely through the holes and the flanges are parallel to each other, then it is deemed that the pipes are aligned.

If the pump is required to operate with suction lift, the suction piping system must be properly made in relation to the original design.

NPSHa of suction piping must be larger than pump's NPSHr. The pump cannot be expected to overcome deficiencies in the suction piping system, such as narrow/thin runs of suction piping, numerous elbows, valves and excessively high points above pump suction, etc. In such cases, cavitation will invariably occur and the pump may not operate at normal capacity.

Pump and pump accessories should be kept apart by valves to avoid any force while pressure testing or washing the piping system.

PIPING SYSTEM ACCESSORIES

SUCTION STRAINERS

Blackmer suggests that suction strainers be installed on the suction side of the pump at least temporarily until the new system is deemed clean of solid residue. The screen area of the strainer should be as large as possible. Generally, the strainer screen should be constructed of 40 meshes, and 20 or 10 meshes for high-viscosity applications. The net screen area should be approximately 5 to 8 times the flow cross-sectional area of the suction pipe. However, if the viscosity of the media is in excess of 200 mm^2/s, then approximately 10 to 20 times the pipe cross-sectional area is suggested for the net screen area. The maximum differential pressure is 0.1 bar (1.5 psi). The strainer on the suction side can be used to prevent solids from entering into the pump and causing damage to certain parts. Install pressure gauges on either side of the strainer to indicate when the strainer should be cleaned. The installed strainer should be easy to maintain and clean.

Generally, strainers can be used on all liquids except for those of an extremely high viscosity. In these cases, the strainer cannot be installed, therefore piping and accessory cleaning is mandatory.

CHECK VALVE

If the discharge piping system is subject to a high static head and if the fluid handled flows back into the pump cavity when stopping the pump, a check valve should be installed. This valve will prevent hydraulic shock acting upon the pump, and most importantly, it allows for separately starting the pump in a parallel connection system.

PRESSURE RELIEF VALVE

An external pressure relief valve must be installed between the pump discharge flange and the gate valve (on the discharge pipe after the discharge port) to protect the pump and the piping system. The pressure and flow rating should match the working pressure and flow of the pump, and media through the valve must return to the suction source.

NOTICE: The pump internal pressure-limiting valve is designed to protect the pump from excessive pressure and must not be used as a system pressure control valve.

GAUGES

A suitable meter must be installed to monitor and control the pump while in operation. The vacuum gauge and pressure gauge can be separately installed on the inlet and outlet piping near the pump.

COUPLING ALIGNMENT

Coupling angle deviation, radial deviation and axial clearance should be kept at a minimum in order to prevent noises, vibration and to reduce wear and tear on bearings and couplings.

NOTE: Coupling axial clearance, per specifications, should be within 2 mm to 5 mm (0.08 in. to 0.2 in.). If using special coupling, please consult with the manufacturer's regulations.

Blackmer pump aggregate (including driver, base-plate and other accessories) has been aligned (coupling) prior to delivery. However, stresses caused by lifting, transporting and pipe connecting can cause minor distortions that will disturb the alignment. Therefore, realignment should be done while installing the pump after the following:

Check coupling alignment after the base-plate has been leveled; after the piping is connected, make a final pre-startup coupling alignment check; if the product to be pumped is high in temperature (for the first use), a hot coupling alignment should be made once the pump has reached its operating temperature.

The driver should be installed and connected according to the specific instructions provided by the motor manufacturer. During installation, please note the connection requirements for the motor and pump. The direction of rotation of the motor and pump must be aligned with the arrow indicating the direction of the rotation on the pump.

Operation without guards in place can cause serious personal injury, major property damage, or death.

If the pump and drive unit are connected, the pump must be primed with the medium prior to checking the direction of driver rotation.

NOTICE: The pump must not run dry, or sealing will be damaged!

DOWELING

After the pump unit has been running for approximately one week, the coupling must be checked for possible misalignment caused by pipe strain or temperature strain. This check must be made immediately after the pumping unit is shut off, before it has a chance to cool. If alignment is correct, the driver must now be doweled on diagonal feet.

LUBRICATION

For all Blackmer Twin Screw Pumps, lubricating oil and/or lubricating grease are used for lubricating the bearings and gears of the pump (see Figure 5).

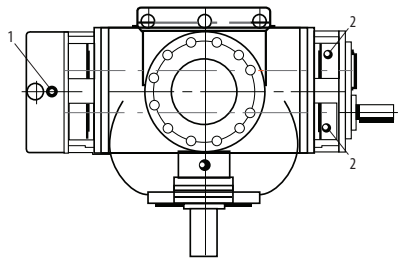

FIGURE 5
1 Lubricating Oil Inlet 2 Grease Inlet

LUBRICATING OIL

Gear oil in the gear box is used to lubricate and cool timing gears of the pump and to splash-lubricate roller bearings. Blackmer suggests using the same type of high-grade gear oil with anti-foaming agents, oxidation and corrosion inhibitors, and an abrasion-resistant agent. It is suggested that the gear oil meet the following requirements:

ISO	150 VG
Viscosity at 50°C	80 – 165 cSt
Flash Point	190ºC – 200°C (374ºF – 392ºF)

The general gear oils that Blackmer suggests using are:
Mobil Industrial Gear Oil, No. 120#
The Great Wall Industrial Gear Oil, No.150#

The frequency at which the gear oil should be replaced:

New Pump	Accumulative Total 260 hours
Intermittent Running	Accumulative Total 600 -1,200 hours
Continuous Running	Accumulative Total 2,200 hours

When the pump is running, the oil level should be maintained at the center of the sight glass, the lowest location should be seeable from the sight glass. When the pump is not running, the oil level should not exceed the highest location of the sight glass.

LUBRICATING GREASE

Lubricate the double-row angular contact ball bearing by injecting grease into the bearing using an oil gun or an oil canister.

NOTE: Under normal operating conditions, apply grease once per 800 accumulated hours.

Use the same type of grease for every application. If the operating temperature is too high or if the load is too heavy, please consult the manufacturer of the grease that is being used.

FLUSHING THE PUMP

NOTICE: If flushing fluid is to be left in the pump for an extended time, it must be a lubricating, non-corrosive fluid. If a corrosive or non-lubricating fluid is used, it must be flushed from the pump immediately.

1. To flush the pump, run the pump with the discharge valve open and the intake valve closed. Bleed air into the pump through the intake gauge plug hole or through a larger auxiliary fitting in the intake piping. Pump air for 30 second intervals to clean out most of the pumpage.
2. Run a system compatible flushing fluid through the pump for one minute to clear out the remainder of the original pumpage.
3. To remove the flushing fluid, follow step 1 above.

NOTICE: After flushing the pump some residual fluid will remain in the pump and piping.

NOTICE: Properly dispose of all waste fluids in accordance with the appropriate codes and regulations.

PUMP PREPARATIONS

The final pre-startup check is very important to avoid operational difficulties. Listed below are several key components to be checked prior to pump operation:

1. Inspect all piping. Check individual piping support; check for leaks and unnecessary piping strain on the pump; flush all piping to ensure removal of foreign material from the system; check that all valves and gauges are functional; check mesh-size suitability.
2. Ensure pump cavity is filled with pump fluid.
3. Check that oil is at the proper level in the gear housing. Excessive oil will cause the gear box to overheat (see Figure 6).

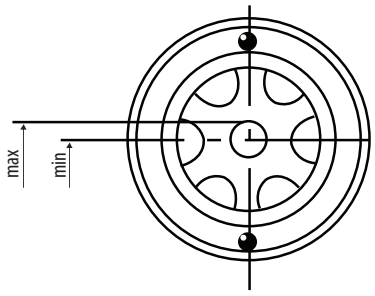

FIGURE 6 Oil Level of the Gear Casing

4. Check pressure gauges and all other meters.
5. Check all electrical equipment (i.e., cables, control lines and accessories).

   If pump is jacketed for heating, heat the pump casing to the prescribed temperature. Steam, hot water and hot oil can be used as a heating medium. According to the different materials of the pump casing, select proper pressure for heating medium within the limit of 2.0 to 8.0 bar (29.0 to 116 psi). Inlet and outlet are located on the pump casing; therefore, the thermal difference between pumped fluid and heating medium should be as small as possible in order to avoid generating internal stress. Especially for cast-iron pumps, the thermal difference between the pumped fluid and the heating medium should be less than 50°C (122ºF).

   If the pump is installed with a double mechanical seal, then sealing the liquid system is required. The pressure for sealing the liquid system should be 1.0 to 2.0 bar (14.5 to 29.0 psi) higher than that of the pump suction chamber. All rules and regulations regarding sealing the liquid system should be adhered to as described in the Sealing Liquid System Instructions.
6. Check rotation shafts by rotating the coupling by hand to determine whether the pump shafts and motor shaft turn freely. If any rubbing or binding occurs, the cause must be located and corrected before starting the pump.
7. Check that motor rotation is correct; refer to the rotation directional mark located on the pump.

STARTING THE PUMP

1. Open the suction and discharge valves wide in order to keep the entire piping system unobscured.

   NOTE: Ensure that all valves and devices on the suction and discharge sides are opened before starting the pump.

2A. If pump is installed with a heating jacket, introduce heating medium and heat the pump to the temperature as described in previous section.

2B. If pump is equipped with double mechanical seals, introduce sealing liquid and monitor the sealing liquid system.

3. Rotate the coupling by hand to determine if rubbing or binding occurs.
4. Start motor/driver.
5. The pump must be stopped if there is no capacity after starting. Restart the pump after several minutes. If there is still no capacity, the cause must be determined. Please refer to the Troubleshooting section of this manual for further instruction.

RUNNING THE PUMP

1. Check the pumping unit for unusual noise or vibration. Any unusual vibration or change in sound must be investigated and corrected to normal operating conditions.
2. Check bearing housing temperature. Bearing temperature can safely rise to between 65°C and 75°C (149ºF and 167ºF). Pumped medium or spot environmental temperature should be considered when determining whether temperature exceeds normal operating conditions.

Bearing temperature up to 90°C (194ºF) is considered to be normal. Within this limit, the stability of the temperature is the best indicator of normal operation. A sudden increase in temperature indicates that a bearing problem is developing and the bearing should be checked immediately.

CAUTION: Do not attempt to measure the temperature by hand!

STOPPING THE PUMP

1. Stop the motor and pump.
2. Close suction and discharge valves.
3. If pump is installed with a heating device, stop the heating device first, then close the sealing system after cooling.

NOTICE:
Maintenance shall be performed by qualified technicians only, following the appropriate procedures and warnings as presented in this manual.

BELOW CAPACITY	NO CAPACITY	EXCESSIVE DRIVER TEMP.	INCREASE IN NOISE OR VIBRATIONS	SHAFT DOES NOT TURN	TROUBLESHOOTING
	•				No medium is stored within the pump. • Re-introduce the appropriate amount of pumped medium.
•	•		•		Suction pipes leak. • Check all direct connecting pipes between suction pipes and discharge pipes.
•	•		•		Insufficient suction conditions. • Check piping. If the velocity of flow is too fast, the diameter of the pipes should be enlarged; if the viscosity of the medium is too high, heating measure should be taken. • Clean the strainer if blocked.
•	•		•		Directional flow in suction piping changes suddenly. • Valve's apertures are not functioning properly, and cavitation has most likely occurred. • Completely open valves in order to correct pipeline.
•	•				Space between screws, screw and casing are enlarged causing wear and tear. • Replace worn parts.
				•	Large foreign matter or impurities among moving parts. • Counter-rotate pump shafts, remove foreign matter or impurities. • If necessary, disassemble the pump and perform a maintenance check.
				•	Internal components expand when overheated. • Rotate pump shafts by hand after cooling down. • Restart pump.
		•	•	•	Bearing is broken or there is a lack of oil in gear housing. • Disassemble the pump to replace broken bearing when it is necessary. • Add gear oil per instructions previously described within this manual.
	•				Incorrect direction of rotation. • Reverse the directional rotation of the driver.
		•	•	•	Incorrect coupling alignment. • Realign coupling.
•					The pump revolving speed (N) is too low. • Check motor. • Determine cause of low motor speed. Refer to manufacturer's instructions to increase revolving speed.
•	•				Discharge pressure is greater than operating pressure of pump, and the recycle valve has opened. • Decrease discharge pressure.
•	•				Mechanical seals leak. • Check and replace mechanical seal.

Disconnecting fluid or pressure containment components during pump operation can cause serious personal injury, death or major property damage.

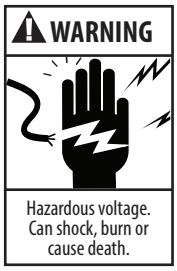

Failure to disconnect and lockout electrical power before attempting maintenance can cause shock, burns or death.

Failure to disconnect and lockout electrical power or engine drive before attempting maintenance can cause severe personal injury or death.

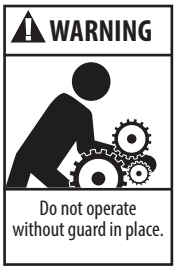

Operation without guards in place can cause serious personal injury, major property damage, or death.

If pumping hazardous or toxic fluids, system must be flushed and decontaminated, inside and out, prior to performing service or maintenance.

Failure to relieve system pressure prior to performing pump service or maintenance can cause serious personal injury or property damage.

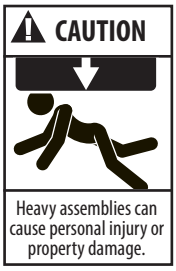

Always use a lifting device capable of supporting the full weight of the pump assemblies.

NOTICE:
Maintenance shall be performed by qualified technicians only, following the appropriate procedures and warnings as presented in this manual.

For special or custom pumps, please refer to the maintenance instructions within this manual.

DAILY MAINTENANCE

1. Check oil level in gear box. If necessary, disassemble screw plug from the top of the gear box and apply oil to the center of the sight glass.
2. Listen for unusual noise or vibration.
3. Inspect pump shaft seal for leaks when pump is running. Regarding mechanical seal installation, product vaporizes resulting in no observable leakage; however, for some applications, a modest amount [3 mL/h (0.10 oz/h) to 5 mL/h (0.17 oz/h)] of leakage is acceptable.

Coupling/Special Coupling: Please refer to Manufacturer's Special Instructions in the Appendix.

Driver: Please refer to Manufacturer's Special Instructions in the Appendix.

Special Accessories: If pump is provided with special accessories, for instructions regarding the maintenance of these accessories, please refer to Manufacturer's Special Instructions in the Appendix.

WEEKLY MAINTENANCE

1. If pump is not in use for one week, open suction and discharge valves, run idle pump under power.
2. Check operation of suction and discharge valves.

QUARTERLY MAINTENANCE

1. Check all foundation bolts, screws and hold-down bolts for tightness.
2. Change oil as previously described in this manual. Turn open draining screw plug of the gear housing, disassemble oil-input screw plug and inject clean, light oil into resin gear box. Tighten screw plug, inject gear oil to the level of the sight glass and tighten oil-input screw plug. Add grease for fore-bearing housing as previously described in this manual.
3. Check the groundings of the motor case and pump base-plate; the grounding resistance must be equal to or less than 1Ω. Ground resistance testing is to be performed every three months.

ANNUAL MAINTENANCE

1. Check coupling alignment.
2. Check existing pump capacity, pressure and power against pump and motor nameplate data. If pressure and capacity have decreased excessively, the pump should be disassembled and worn parts should be replaced. However, if pump performance is satisfactory, disassembly for inspection is not required.

Disassembly & Reassembly

S SERIES
Twin Screw WTG Pumps

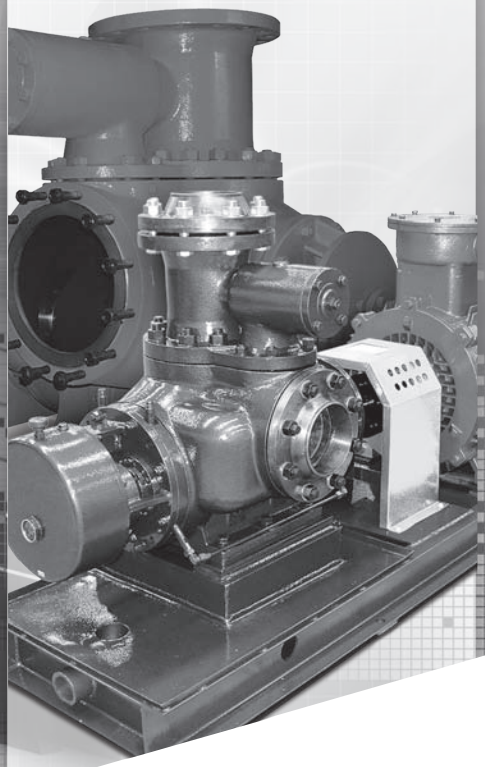

Where Innovation Flows

a DOVER company

blackmer.com

TABLE OF CONTENTS

SECTION 8

INTRODUCTION 13
SAFETY PRECAUTIONS 14
SPECIAL TOOLS 14

SECTION 9

2H…B/F/G SERIES PUMPS 15
DISASSEMBLY 15
REASSEMBLY 16
CROSS-SECTIONAL DIAGRAMS 17
2H...B/F PUMPS 17
2H...G PUMPS 18

SECTION 10

2HE, 2HCE AND 2VE SERIES PUMPS 19
DISASSEMBLY 19
REASSEMBLY 20
CROSS-SECTIONAL DIAGRAMS 21
2VE PUMPS 21
2HE...A PUMPS 22
2HE...B PUMPS 23

SECTION 11

2HM, 2HC, 2HR AND 2VM SERIES PUMPS 24
DISASSEMBLY 24
REASSEMBLY 25
CROSS-SECTIONAL DIAGRAMS 27
2HC...AP PUMPS 27
2HC...BP PUMPS 28
2HCG...B PUMPS 29
2HC...P PUMPS 30
2HM...A PUMPS 31
2HMB PUMPS 32
2HM...B PUMPS 33
2HMG...C PUMPS 34
2HM...P PUMPS 35
2HRA PUMPS 36
2HRG PUMPS 37
2VM PUMPS 38

SECTION 12

INDIVIDUAL PUMP COMPONENTS 39
DISASSEMBLY/REASSEMBLY FOR INDEPENDENT, PRESSURE-LIMITING VALVES 39
INTERNAL SPRING STRUCTURE (SIDE-IN, TOP-OUT) 39
INTERNAL SPRING STRUCTURE (SIDE-IN, SIDE-OUT) 40
EXTERNAL SPRING STRUCTURE 41
DISASSEMBLY/REASSEMBLY FOR BUILT-IN PUMP CASING, PRESSURE-LIMITING VALVE 42
INTERNAL SPRING STRUCTURE (WELDED) 42
INTERNAL SPRING STRUCTURE (CASTED) 43
EXTERNAL SPRING STRUCTURE 44
DISASSEMBLY/REASSEMBLY FOR MECHANICAL SEALS 45
SINGLE MECHANICAL SEAL 45
SINGLE CARTRIDGE-TYPE 46
DOUBLE CARTRIDGE-TYPE 47

Blackmer pump manuals and parts lists may be obtained from Blackmer's website (www.blackmer.com) or by contacting Blackmer Customer Service.

INTRODUCTION

The following instructions have been divided into three sections to accommodate the different Twin Screw pump types: 2H, 2HE, 2HM, 2HC, 2HR, 2VE and 2VM.

All disassembled parts, such as gear wheels, spacer bushes, adjusting rings, etc., must be labeled immediately in order to avoid confusion during reassembly. After disassembling the screw pump, all parts must be cleaned thoroughly and checked to ensure that they are reusable. Before reassembly, the surfaces of the individual parts should be carefully cleaned and checked.

The following parts should not be reused for operational safety reasons:

- Flange Gasket
- O-rings
- Oil Seal

This is a SAFETY ALERT SYMBOL.

When you see this symbol on the product, or in the manual, look for one of the following signal words and be alert to the potential for personal injury, death or major property damage.

DANGER — **Warns of hazards that WILL cause serious personal injury, death or major property damage.**

WARNING — **Warns of hazards that CAN cause serious personal injury, death or major property damage.**

CAUTION — **Warns of hazards that CAN cause personal injury or property damage.**

NOTICE:
Indicates special instructions which are very important and must be followed.

NOTICE:

Blackmer Power Pumps **MUST** only be installed in systems, which have been designed by qualified engineering personnel. The system **MUST** conform to all applicable local and national regulations and safety standards.

This manual is intended to assist in the installation and operation of Blackmer Power pumps, and **MUST** be kept with the pump.

Pump service shall be performed by qualified technicians **ONLY**. Service shall conform to all applicable local and national regulations and safety standards.

Thoroughly review this manual, all instructions and hazard warnings, **BEFORE** performing any work on the pump.

Maintain **ALL** system and pump operation and hazard warning decals.

WARNING

Hazardous pressure can cause personal injury or property damage.

Disconnecting fluid or pressure containment components during pump operation can cause serious personal injury, death or major property damage.

WARNING

Hazardous voltage. Can shock, burn or cause death.

Failure to disconnect and lockout electrical power before attempting maintenance can cause shock, burns or death.

WARNING

Hazardous machinery can cause serious personal injury.

Failure to disconnect and lockout electrical power or engine drive before attempting maintenance can cause severe personal injury or death.

WARNING

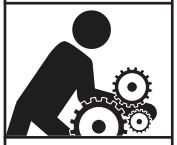

Do not operate without guard in place.

Operation without guards in place can cause serious personal injury, major property damage, or death.

WARNING

Hazardous or toxic fluids can cause serious injury.

If pumping hazardous or toxic fluids, system must be flushed and decontaminated, inside and out, prior to performing service or maintenance.

WARNING

Hazardous pressure can cause personal injury or property damage.

Failure to relieve system pressure prior to performing pump service or maintenance can cause serious personal injury or property damage.

CAUTION

Heavy assemblies can cause personal injury or property damage.

Always use a lifting device capable of supporting the full weight of the pump assemblies.

NOTICE:
Maintenance shall be performed by qualified technicians only, following the appropriate procedures and warnings as presented in this manual.

SAFETY PRECAUTIONS

This manual contains basic references that are to be observed during pump transportation, installation, operation and maintenance, and, therefore, should be kept as part of the permanent pump records and readily accessible as a reference to any person working or maintaining the pumping unit.

The instructions within this manual must be thoroughly reviewed in their entirety and fully understood prior to pump installation, operation or maintenance care.

These pumps have been designed for safe and reliable operation when properly used and maintained in accordance with the instructions contained within this manual. A pump is a pressure-containing device with rotating parts that can be hazardous. Failure to read and comply with installation, operation and maintenance instructions will void the responsibility of the manufacturer and may result in bodily injury or equipment damage.

NOTE: In addition to the Safety Precautions identified in this section, special safety information is included within proceeding chapters where appropriate.

Markings and Instructions on Pump Unit

Direct instructional references regarding direction of rotation, fluid-flow orientation, safety warning, etc., are clearly marked on the pump. Please observe and follow all indicated safety markings and instructions.

NOTE: Failure to observe safety references can result in the following dangers:

- Equipment failure
- Maintenance and service policies voided
- Environmental pollution due to hazardous-substance leakage
- Personal endangerment by subject of electrical, mechanical and chemical influences

Qualified Personnel & Training

All persons installing, operating, maintaining and inspecting the pumping unit must have the required qualifications for work to be performed. All instructions and safety markings must be observed, understood and adhered to by all personnel working on or around the pumping unit. If installation or operational knowledge is inadequate, training must be provided. The scope of the personnel responsibilities, competency and supervisory duties must be closely controlled by the customer.

Safety References for Customers

- All work performed on or around the pumping unit must be completed by qualified personnel.
- Machine components that are either hot or cold must be protected on-site to prevent personal endangerment.
- Safety shield on the pumping unit must not be removed from the machine while the pump is running.
- Leakage of hazardous media (i.e., toxic, flammable, explosive, etc.) must be collected in a way that no damage to personnel or environment occurs.
- If the pumped media is explosive, toxic or flammable, a warning or alarm device must be installed, pump casing must be well-ventilated and the operating site must be a no smoke/fire zone.
- To prevent electrical damage, all electrical devices must be safely protected, functional and controlled.

Pump Operating Parameters

Unless there is written admission by S Series, the pump must not be operated at higher parameters than specified. Adhering to these specifications prevents danger to personnel and equipment damage.

Pump Monitoring

Suitable measuring devices must be installed to inspect and control the pump during operation. Generally, pressure gauges are to be installed on suction and discharge lines near the pump.

SPECIAL TOOLS REQUIRED FOR DISASSEMBLY/REASSEMBLY

Please refer to the table below for the appropriate tools to be used during disassembly or reassembly of pump.

No.	Name	Qty.
1	Sleeve for Mechanical Seal	1
2	Inner Sleeve for Oil Seal	2
3	Outer Sleeve for Oil Seal	1
4	Bushing for Bearing	1
5	Set Bushing for Bearing	1
6	Dismantling Screw	2
7	Anti-Rotation Copper Pipe	1

DISASSEMBLY

NOTE: For part reference, please refer to the appropriate pump in Section 2 Cross-Sectional Diagrams.

Disassembly of Gear Box

See Figure 1. Unscrew drain plug (130), loosen air strainer (107) and drain lubricating oil from gear box (04). Collect the lubricating oil in a suitable container. Lift off gear box (04) after lock nuts (121) have been removed.

ATTENTION: If the pump has an end-side coupling half, disassemble before disassembling the gear box. Remove the key on the shaft end at this time.

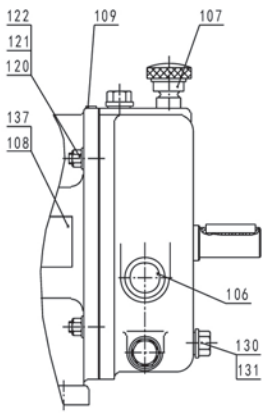

FIGURE 1

Disassembly of Pump Casing

Disassemble hexagon nut (118) with plain washer (119) of pump casing (01) and bearing housing (03). Disassemble pump casing (01) by tightening two forcing screws.

ATTENTION: Threaded holes are located in bearing housing (03).

Disassembly of Screws

See the applicable Cross-Sectional Diagram in Section 2; loosen bolt (141), disassemble pressing board (21) of screws and then disassemble left-hand screw and right-hand screw together. Remove key (135), screw adjusting ring (20) and mechanical seal adjusting ring (26). Next, label the dismantled items.

Disassemble the rotating and stationary ring unit of the mechanical seal. If space plate (50) is present, unscrew screw (146) and disassemble spacer plate (50).

ATTENTION:

- Immediately label all dismantled parts in order to avoid confusion during reassembly.
- If seal boxes (09) are in good condition, do not disassemble them! Otherwise, loosen socket screws (110) and disassemble the seal boxes respectively.

Disassembly of Timing Gears

See Section 2 Cross-Sectional Diagrams and Figure 2.

Jam the teeth of the gear wheels (13 & 14) with a copper sheet,

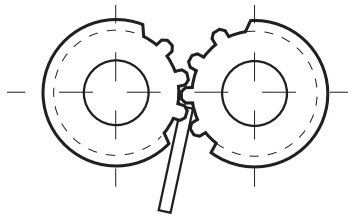

FIGURE 2

loosen and remove the back-stop washer (129) and locking nut (128) on the driving shaft (05), remove bolt (115) and spring washer (116) on the driven shaft, use tools (such as a drag wheel tool) to remove gear (13 & 14), remove key (134). Loosen screw (126), remove bearing cover (11) and spacer (17). Be sure to label all disassembled components.

ATTENTION:

- Only when the replacement of new timing gears is required, bolts (112) can be unscrewed so that gear wheel (14) and gear sleeve (15) are separated. At this time, bolts (112) must be replaced.
- Mark the starting point of meshing before removing the timing gears.
- Immediately label all dismantled parts in order to avoid confusion during reassembly.

Disassembly of Bearings

See Section 2 Cross-Sectional Diagrams.

Affix the appropriate-sized auxiliary tool on the side of the screw sleeve that is on the shaft (05 & 06), use special tool to hit the auxiliary tool, hit out the shafts (05 & 06) from bearing housing respectively.

Disassemble bearings (101 & 102) and internal, external spacer bushing (18 & 19) from the driving and driven shafts (05 & 06). Next, label the dismantled items.

ATTENTION: Immediately label all dismantled parts in order to avoid confusion during reassembly.

REASSEMBLY

NOTE: For part reference, please refer to the appropriate pump Cross-Sectional Diagrams; see Section 2 for pump diagram.

Install O-rings (103) and oil seal (104) on sealing box (09). Fasten sealing box (09) to bearing housing (03) with screw (110). (If spacer plate (50) is present, fasten sealing box (09) to spacer plate (50) and then fasten both of them to bearing housing).

Install bearings (101) onto driving and driven shafts (05 & 06), and then strike outer ring of the bearing (101) with appropriate tool, insert them into driving (shaft) and driven (shaft) bearing bores of bearing housing (03).

In sequence, assemble the internal and external spacer bushings (18 & 19) and the bearings (102) to driving and driven shafts (05 & 06) with appropriate tools.

Tighten bearing cover (11) onto bearing housing (03) with screws (126).

Assemble the labeled stationary ring of mechanical seal into the sealing box (09) and rotating ring of mechanical seal onto driving and driven shafts (05 & 06) at the original location.

Install the labeled mechanical sealing adjustment ring (20) and screw sleeve adjustment ring (26) onto the driving and driven shafts (05 & 06) according to the original location marked during disassembly.

Position the screws (07 & 08) onto the driving and driven shafts (05 & 06) by the key (135). Use bolt (141) and spring washer (142) to push the plate (21) allowing the screws (07 & 08) to be located on the driving and driven shafts (05 & 06).

Place the gasket between bearing housing (03) and pump casing (01), secure with bolts (117), nuts (118) and flat washers (119).

Individually mount spacer bushings (17) on shafts (5 & 6) and insert key (134) onto shafts. Mount gear wheels (13 & 14) on shafts (5 & 6), fasten gear wheel (13) to driving shaft (05) with lock nuts (128) and lock washers (129). Next, mount the pressing board (16) on the driven shaft, fasten with spring washers (116) and screw bolts (115).

Fasten gear box unit (04) and gasket (28) to bearing housing (03) with stud screw bolts (120), screw nuts (121) and flat washers (122).

Fasten drain screw plug (130), open feed screw plug and pour clean gear oil. For oil level reference, please see Figure 3.

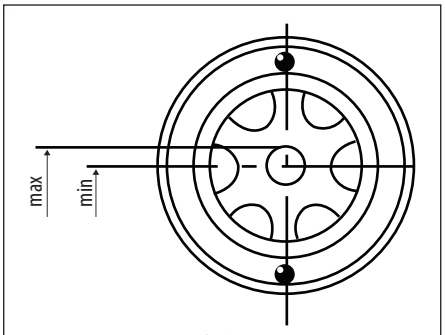

FIGURE 3

CROSS-SECTIONAL DIAGRAMS

2H...B/F PUMPS

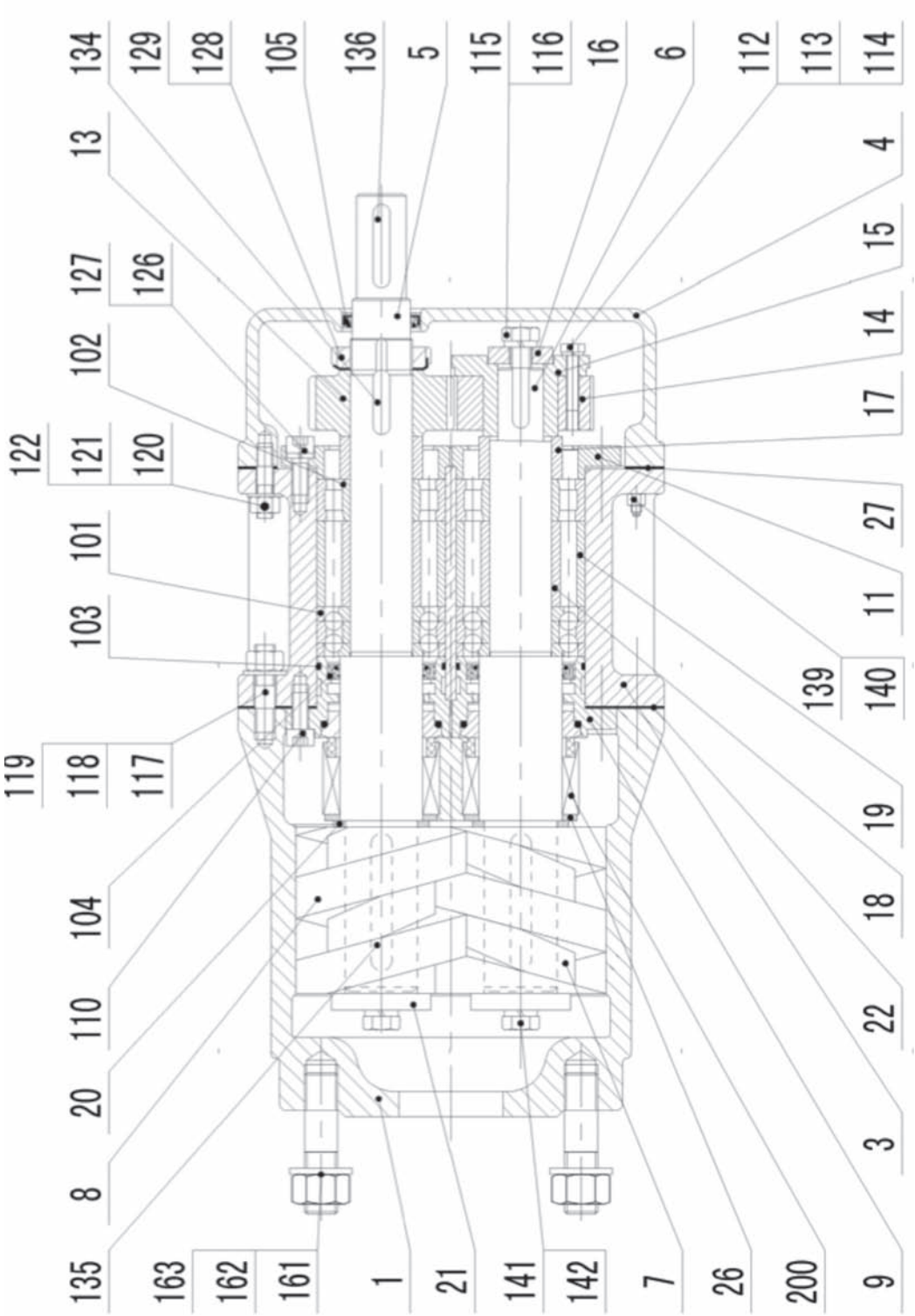

CROSS-SECTIONAL DIAGRAMS

2H...G PUMPS

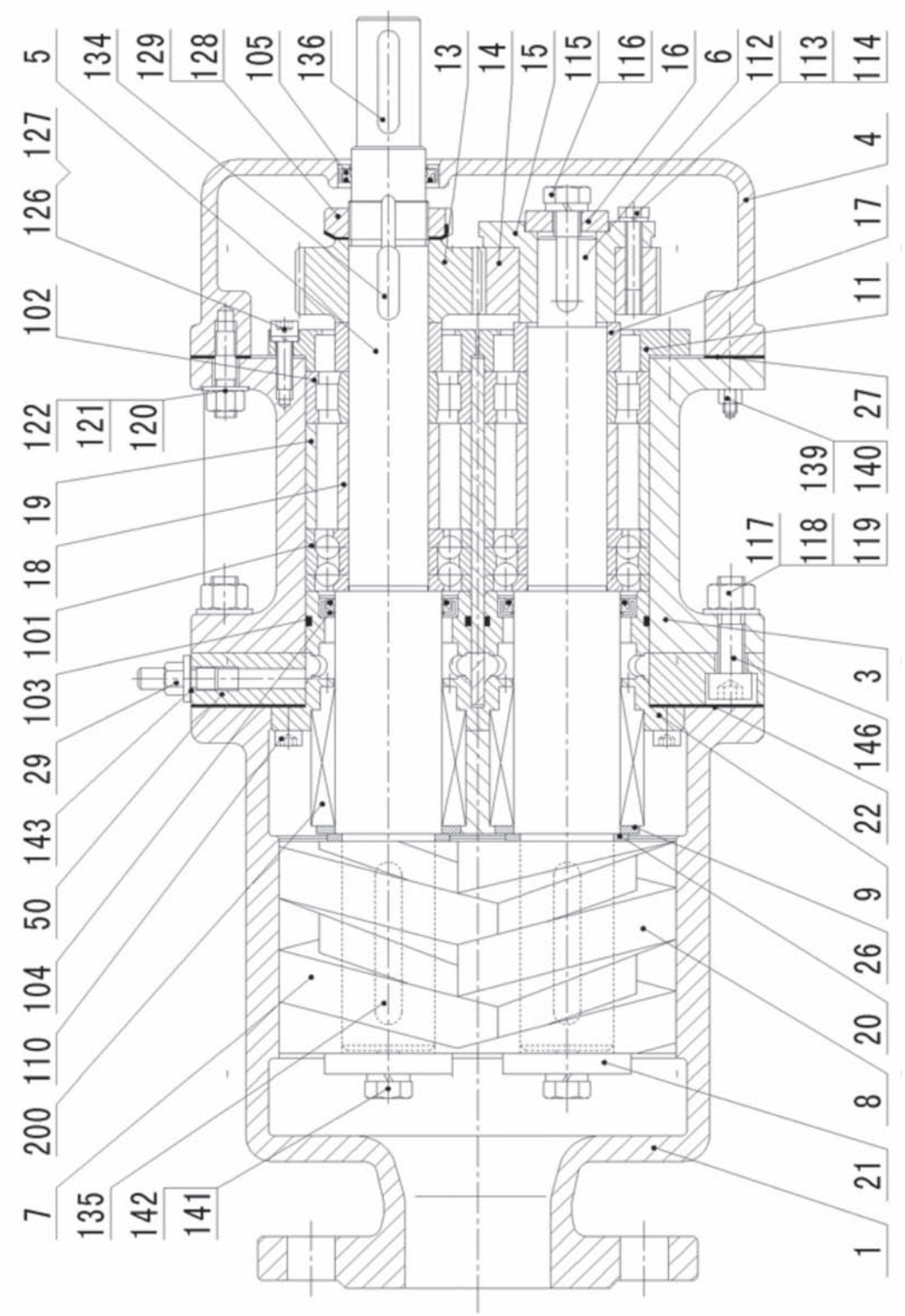

DISASSEMBLY

NOTE: For part reference, please refer to the appropriate pump cross-sectional diagram; see Section 3 for pump diagram.

Disassembly of Pedestal

If pedestal (45) is present continue with the following instructions:

Remove screw bolts (120), hexagon nuts (121) and spring washer (122) that connect pump casing (01) and pedestal (45). Next, remove pedestal.

Disassembly of Back Bearing Housing

Loosen hexagon nuts (118) and washer (119) that connect the pump casing and the back bearing housing. Next, remove the back bearing housing.

ATTENTION: Threaded holes are located on the back bearing housing.

Disassembly of Back Bearing

Loosen bolts (115), remove spring washer (116) and end plate (40). Remove bearing (102) from the driving and driven shaft by a pulling device. Remove spacer bushings (16 & 17).

ATTENTION: Immediately label all dismantled parts in order to avoid confusion during reassembly.

Dismantle the Bearing Cover

Remove the lubricating pipe (400), next loosen bolts (126) and spring washer (127). Remove the front bearing covers (11 & 12). Remove O-ring (103) from bearing cover (11 & 12). Next, remove the stationary mechanical seal ring from the driving shaft bearing cover (11).

Remove the rotating ring and O-ring, loosen the set screw, remove the rotating casing, remove the adjustable ring (19) from the driving shaft and label them appropriately. Loosen the round nut (128) and remove tab washer (129). Loosen the bolt (115) and remove the spring washer (116) and end plate (40) that are located near the front bearing.

ATTENTION: Place disassembled mechanical seal in a secure place to avoid damage. Immediately label all dismantled parts in order to avoid confusion during reassembly.

Disassembling Front Bearing Housing

ATTENTION: Before proceeding with disassembly instructions, first stop the drive shaft from moving axially.

Perform operations in the non-driving direction of the pump in order to fix the drive shaft axially. Install a metal plate on the driving and driven shafts end with bolts (115) and end plate (40). The metal plate contacts with the pump casing in order to stop the shaft from moving axially.

Remove the front bearing housing assembly (including front bearing housing (02), front bearing (101), etc.) from shafts with two dismantling screws. Remove the adjustable ring from the driven shaft and label appropriately to avoid confusion during reassembly.

Disassembly of Timing Gears

Remove gears (13 & 14) with the appropriate pulling mechanism from shafts (05 & 06) separately. Remove key (134).

Disassembly of Bearing Housing Unit

Disassembly of Front Bearing: Remove hexagonal bolt (110) and spring washer (111). Next, remove positioning bearing cover (09 & 10) from the front bearing housing. Remove front bearing (101) from front bearing housing with the appropriate tools.

Disassembly of Back Bearing: Remove screw (140), spring washer (141) and back-positioning bushing (32). If necessary, pull the shaft assembly from pump casing, including shafts (05 & 06) and screws (07 & 08).

REASSEMBLY

NOTE: For part reference, please refer to the appropriate pump Cross-Sectional Diagram; see Section 3 for pump diagram.

Push front positioning bearing cover (09) into front bearing housing (02) and fasten with bolts (110) and spring washer (111) to form front bearing housing assembly.

Push positioning bushing (32) into back bearing housing (03) and fasten with screw (140) and spring washer (141) to form back bearing housing assembly.

Insert O-rings into driving and driven shaft bearing cover (11 & 12). Mount mechanical sealing stationary ring and O-ring into drive shaft bearing cover to form drive shaft bearing cover assembly.

Affix the twin shaft assembly together and insert into the appropriate mounting holes.

Mount key (134) into driving and driven shafts assembly separately. Next, mount the timing gears into the drive shaft together in accordance with the meshing position marked during disassembly.

ATTENTION: The meshing position must be in accordance with the position marked during disassembly.

Mount driving spacer bushing (16) and driven spacer bushing (17) separately.

Next, mount back bearing (102) onto shafts (05 & 06), then tighten the end plate (40) with the bolt (115) and spring washer (116).

Mount front bearing housing assembly and gasket (22) onto pump casing surface and fasten with double-ended studs (117), hexagonal nut (118) and plain washer (119).

Lock this bearing with round nut (128) and tab washer (129). Place mechanical seal adjustable ring (19) onto driving shaft (05), mount the rotary casing, O-ring and rotary ring of the mechanical seal. Fasten the assembly of driving shaft bearing cover into the front bearing housing (02) with bolts (126) and spring washer (127).

Install the adjustable ring (29) of bearing (which was labeled during disassembly) onto driven shaft (06) and push bearing (101) with the appropriate tool. Fasten the assembly of bearing cover (12) into the front bearing housing (02) with bolts (126) and spring washer (127).

Fasten back bearing housing (03) and gasket (22) onto pump casing (01) with double-ended studs (117), plain washer (119) and nuts (118).

If applicable, mount pedestal (45) onto pump casing (01) with bolts (120), nuts (121) and spring washer (122).

CROSS-SECTIONAL DIAGRAMS

2VE PUMPS

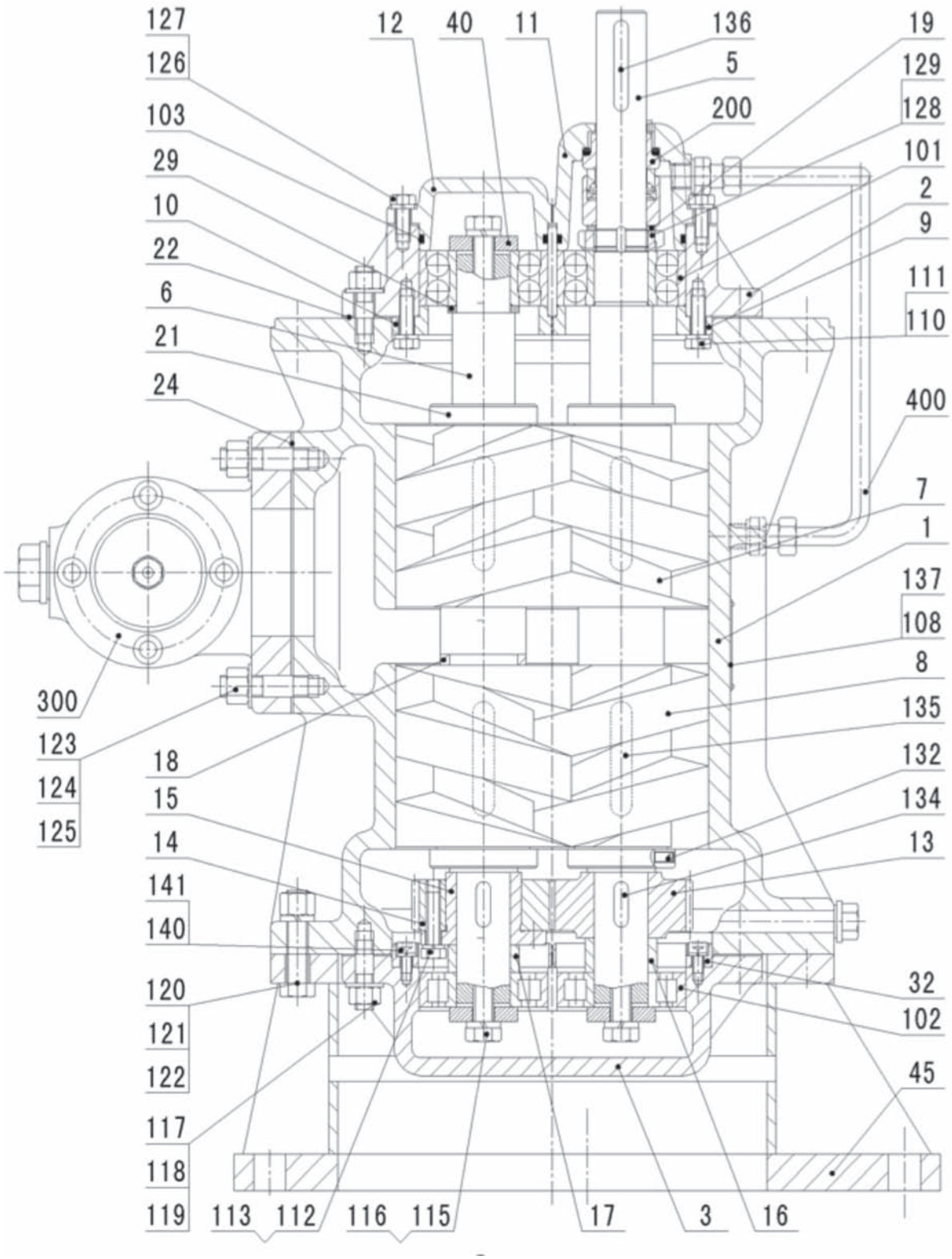

CROSS-SECTIONAL DIAGRAMS

2HE...A PUMPS

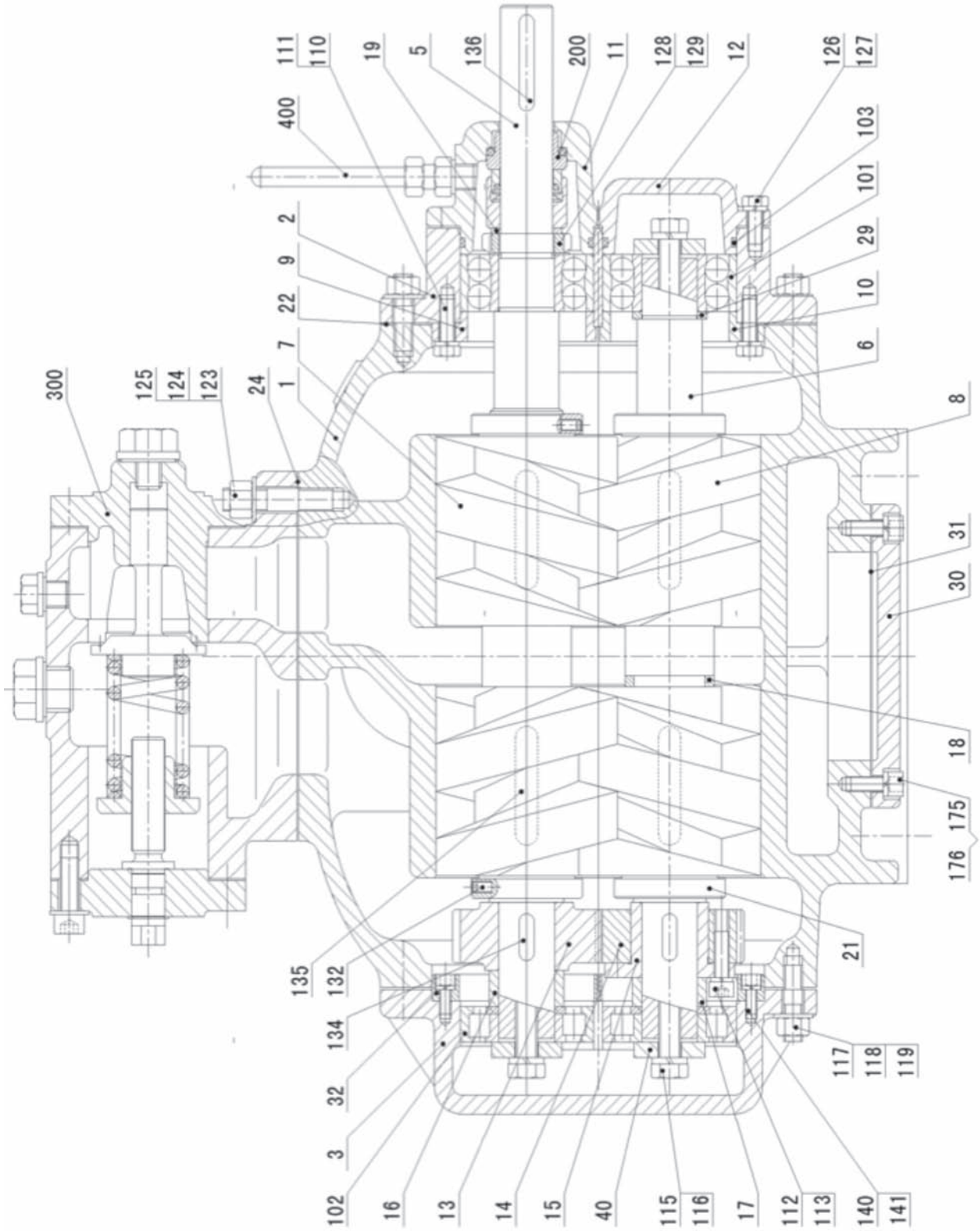

CROSS-SECTIONAL DIAGRAMS

2HE...B PUMPS

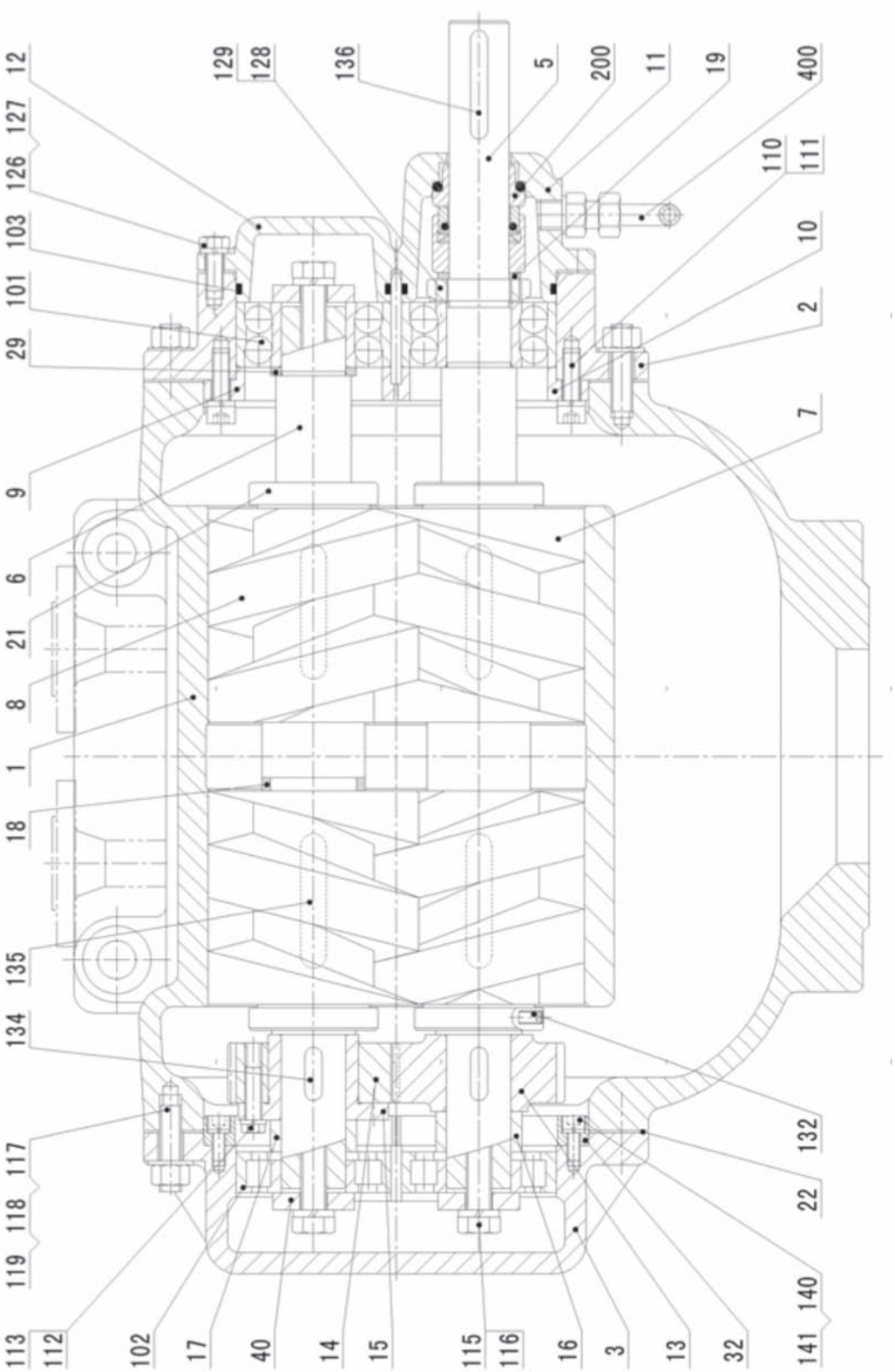

DISASSEMBLY

NOTE: For part reference, please refer to the appropriate pump Cross-Sectional Diagram; see Section 4 for pump diagram.

Disassembly of Bottom Foot

If bottom foot is present, please perform the following disassembly instructions:

Remove hexagonal bolt (160), nuts (161) and flat washers (162) from bottom foot (45) that is connected to pump casing (01). Next, remove bottom foot (45).

Disassembly of Gear Box

See Figure 5. Remove drain screw plug (130) and gasket (131), open air filter (107) and drain lubricating oil from gear box (04).

Collect the lubricating oil in an environmentally safe container.

Install drain screw plug (130) and gasket (131) on gear box (04).

Remove gear box (04) once nuts (121) and flat washers (122) have been removed.

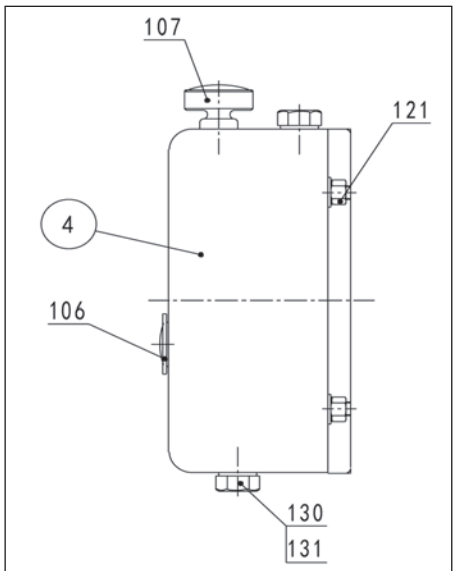

FIGURE 5

Disassembly of Timing Gears

See Figure 6. Jam the teeth of the gear wheels (13 & 14) with a copper sheet.

Remove bolt (115), spring washer (116) and end plate (16).

Remove gear wheels (13 & 14), keys (134) and space bushing (17).

Next, label the dismantled items.

ATTENTION:

- Only when the replacement of new timing gears, new shafts or new screws is required, bolts (112) can be loosened and the gear wheel (14) and gear sleeve (15) can be separated. In case of reassembly, normally, the removed bolts (112), spring washers (113) and flat washers (114) must be replaced.
- Mark the starting point of meshing before removing the timing gears.
- Immediately label all dismantled parts in order to avoid confusion during reassembly.

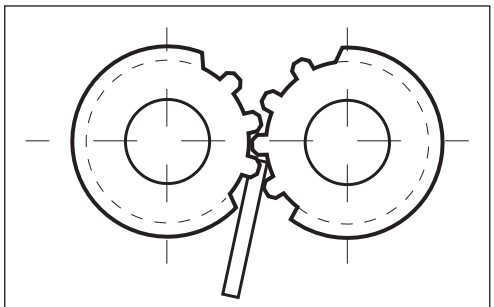
FIGURE 6

Disassembly of Bearing Housing (Driven-Side)

Remove hexagonal nuts (118) and flat washers (119) from rear bearing housing (03). By two forcing screws, remove rear bearing housing and rear bearing (102) together from the shaft. The forcing screw hole is in bearing housing (03).

ATTENTION: Do not damage the stationary ring of mechanical seal!

Remove the stationary ring unit and O-rings from sealing box 09. Loosen screws (110) and spring washers (111), remove sealing box (09) from rear bearing housing (03) by forcing screw and removing oil seal (104).

Remove inner spring clip (133) using a caliper. Reverse inner rim of rear bearing 180° and reinsert it into rear bearing (102), hit the inner rim of the bearing with a copper rod gently, remove the outer rim unit of bearing (102) and remove the outer adjusting ring (20) for the bearing housing.

ATTENTION: Immediately label all dismantled parts to avoid confusion during reassembly.

Disassembly of Bearing Covers

Tighten rear bearing housing (03) to pump casing (01) by two nuts (118), install gear (13), space sleeve (17) onto shaft (05), let gear flank contact bearing housing flank, tighten the other flank of gear with end plate (16) and bolt (115) in place to prevent the axial movement of driving and driven shaft.

Loosen the set screw in the coupling of pump side, pull the coupling off driving shaft with tools, remove key (136).

Loosen bolts (126), spring washer (127) and remove bearing covers (11 & 12). Next, remove O-rings (103) from bearing covers (11 & 12) and oil seal (105) from bearing cover (11).

If applicable, loosen set screws (138) and remove shaft sleeve (25).

Loosen locking washers (129) and locking nuts (128) from driving shaft (05). Next, loosen locking washers (129) and locking nuts (128) from idle shaft (06).

Disassembly of Bearing Housing (Driving-Side)

ATTENTION: Before proceeding with disassembly instructions, first stop the drive shaft from moving axially.

Remove hexagonal nuts (118) and flat washers (119) from driving side bearing housing (02) that is connected with pump casing (01). Using two forcing screws, remove driving side bearing housing (02) unit (together with the bearing 101) from shafts. The forcing screw hole is in front bearing housing (02).

ATTENTION: Immediately label removed adjusting ring in order to avoid confusion during reassembly.

Loosen bolt (115), remove space sleeve (17) and gear (13), loosen nut (118) and remove rear bearing housing (03).

Remove the stationary ring unit and O-ring of mechanical seal from sealing box (09).

Loosen screws (110) and spring washers (111) on sealing box (09), then remove sealing box (09) from front bearing housing (02 or 03) with forcing screw, remove oil seal (104). Hit bearing (101) out from the front bearing housing (02) with copper rod gently. Remove the front bearing adjusting ring (20).

Remove the rotating ring unit of mechanical seal, remove adjusting ring (19) of mechanical seal.

ATTENTION: Immediately label adjusting ring (19) of mechanical seal in order to avoid confusion during reassembly.

Pull out the shaft unit (05 and 06) with screw (07 and 08) from pump casing (01).

REASSEMBLY

ATTENTION: In order to facilitate the assembly of the oil seal (104) and avoid damage during assembly, S Series suggests the conical installation bushing for oil seal (see Figure 7), to achieve the gradual transition from a small diameter to a bigger diameter.

Mesh the shaft assembly unit (05 & 06) together and place them into the 8-shaped hole of pump casing (01) in the proper, original position.

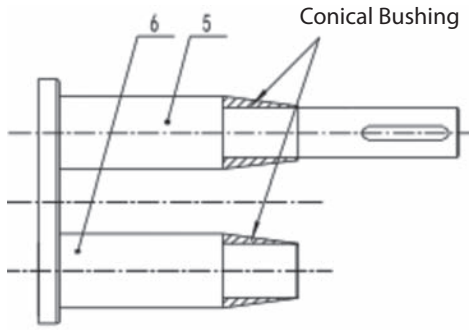

FIGURE 7

Install the mechanical seal adjusting ring (19) to driving and driven shaft (05 & 06) at the original position.

Separately fasten sealing box units (09) and gasket (27) to bearing housings (02 & 03) with screws (110) and spring washers (111), install oil seal (104) to bearing housings (02 & 03) so that the front and rear bearing housing unit is created.

ATTENTION: The lip of the oil seal deviates from the atmospheric side.

Install O-ring (103) into the driven shaft bearing cover (12) to form driven shaft bearing cover unit.

Install O-ring (103) and oil seal (105) on driving shaft bearing cover (11) to form driving shaft bearing cover unit.

According to Figure 7, install conical installation bushing for oil seal, tighten front bearing housing unit (02) and gasket (22) to pump casing (01) with stud screw (117), flat washer (119), nut (118), and then remove conical installation bushing for oil seal.

Insert double-row ball bearing (101) and fasten it on the driving shaft (05) with locking nut (128) and locking washer (129).

Insert driving shaft bearing cover unit (11) into bearing housing (02), tighten with bolts (126) and spring washers (127) to front bearing housing (02).

Insert adjusting ring (20) into the bore of driven shaft bearing housing (02). Or, install the adjusting ring (29) on the driven shaft.

Next, insert double-row ball bearing (101) and fasten it on the driven shaft (06) with locking nuts (128) and locking washers (129). Then, install driven shaft bearing cover (12) unit to the bearing housing (02), tighten with screws (126) and spring washers (127).

According to Figure 8, install two conical installation bushings for oil seal on the no-driving side of the driving and driven shaft (05 & 06). Install gasket (22). Tighten rear bearing housing unit (03) to pump casing (01) with stud screw (117), flat washer (119), nut (118) and remove conical installation bushings for oil seal.

Install the previous adjusting ring (20) and bearing (102) into rear bearing housing (03), then install inner C-clip (133).

ATTENTION: When installing the cylinder roller bearing with curb-side on inner ring, the curbside must be on the side farthest away from pump.

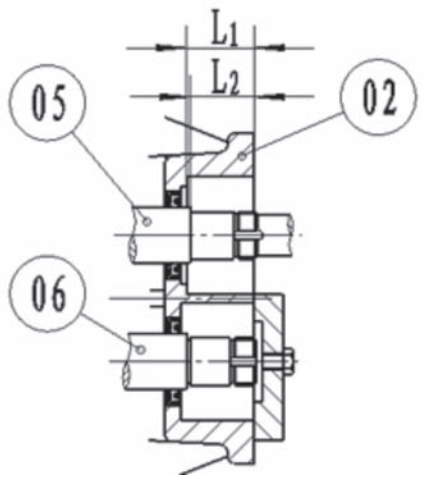

FIGURE 8

Install space sleeve (17) on driving and driven shaft (05 & 06). Install key (134) on driving shaft (05); install driving gear wheel (13) on driving shaft (05); install end plate (16), spring washer (116) and tighten with bolt (115). By the meshing point between gear wheel (13) and (14), install driven gear wheel unit (14); install key (134) on driven shaft (06); install end plate (16), spring washer (116) and tighten with bolt (115).

Install stud screws (120) and oil glass (106) on gear box (04) to form gear box unit. Next, install the gear box unit and gasket (28) onto rear bearing housing (03). Tighten with stud screw (120), nuts (121) and flat washers (122).

Fasten drain screw plug (130) and pour lubrication oil into gearbox. Please reference Figure 9 for proper oil level before tightening screw plug (140) with flat washer (141).

NOTE: If using bottom foot (45), fasten the bottom foot to the pump casing (01) with hexagonal bolt (160), nuts (161) and spring washers (162).

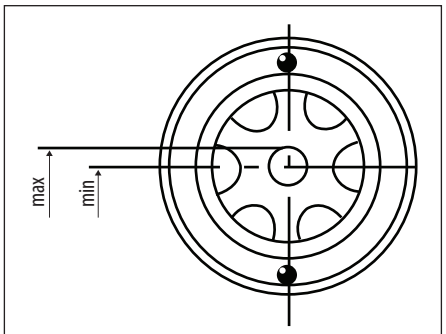

FIGURE 9

CROSS-SECTIONAL DIAGRAMS

2HC...AP PUMPS

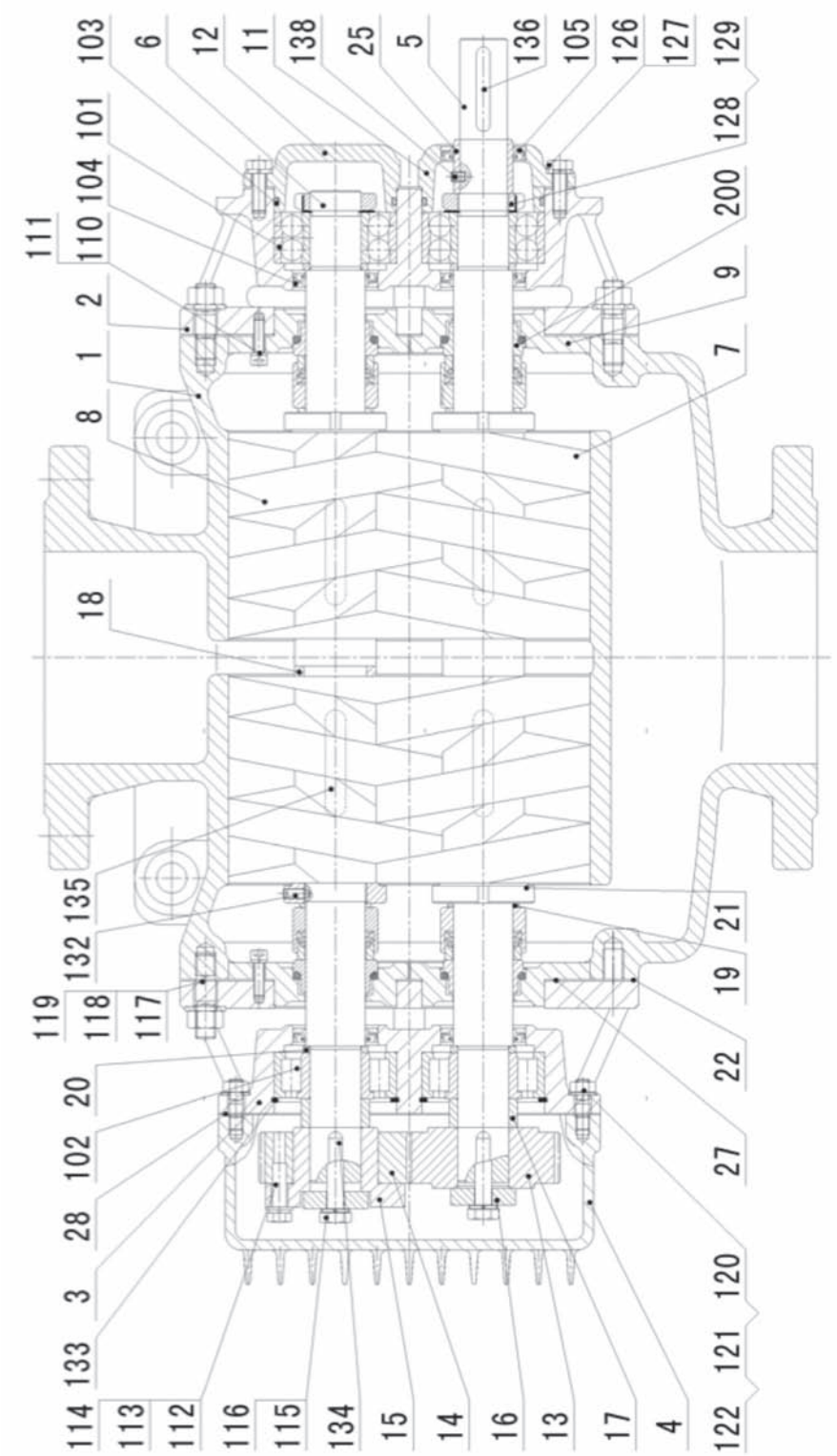

CROSS-SECTIONAL DIAGRAMS

2HC...BP PUMPS

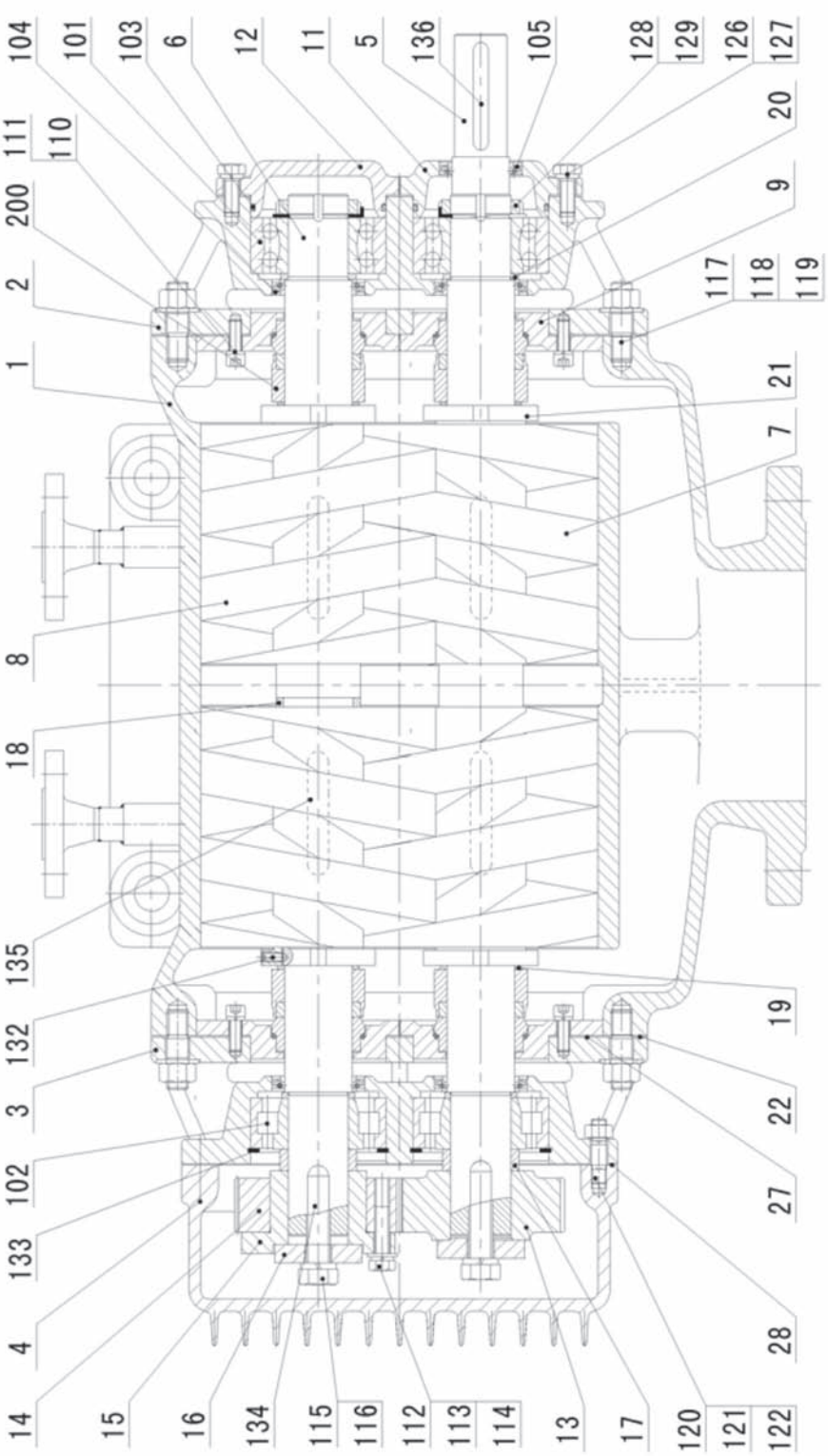

CROSS-SECTIONAL DIAGRAMS

2HCG...B PUMPS

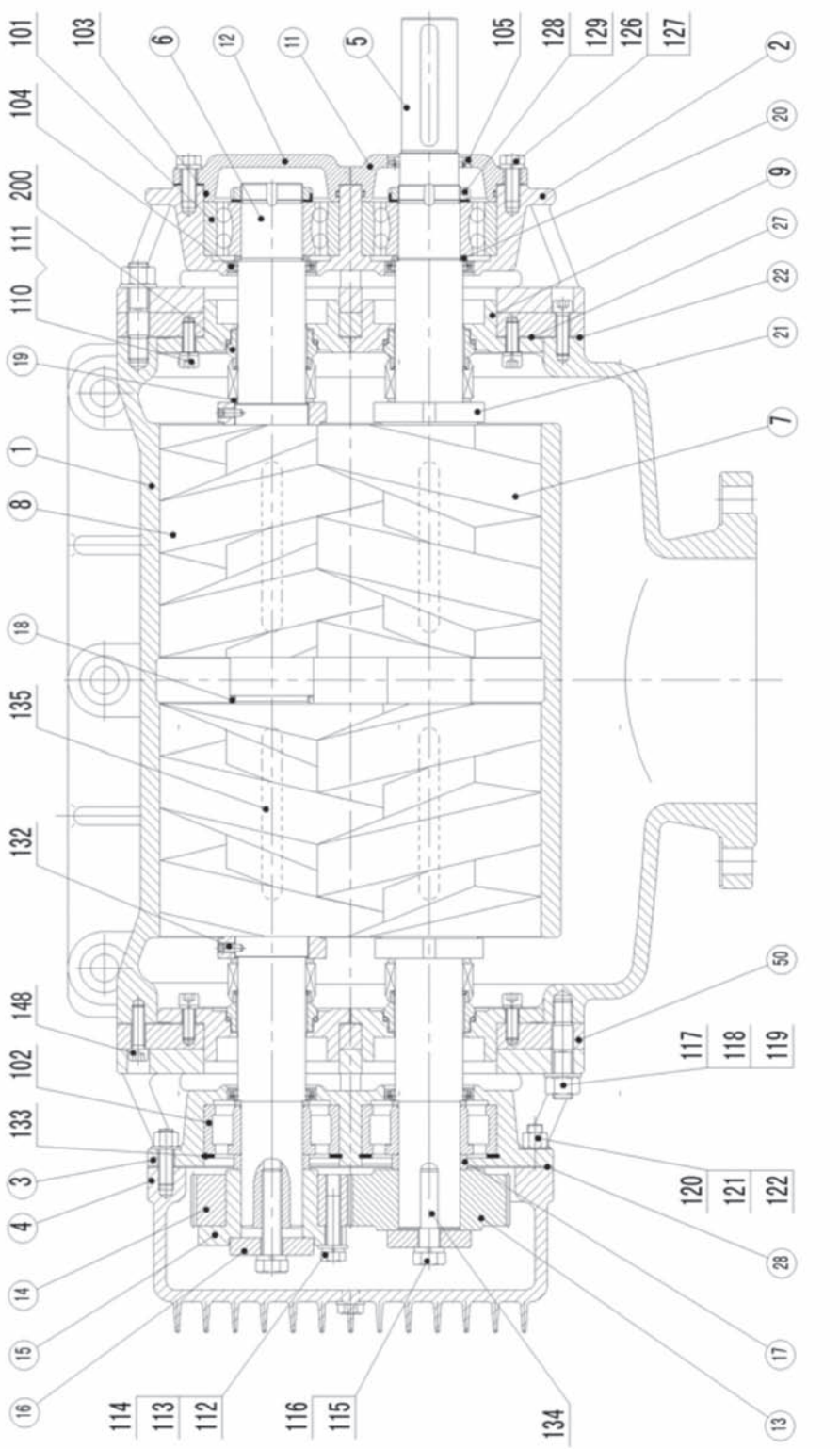

CROSS-SECTIONAL DIAGRAMS

2HC...P PUMPS

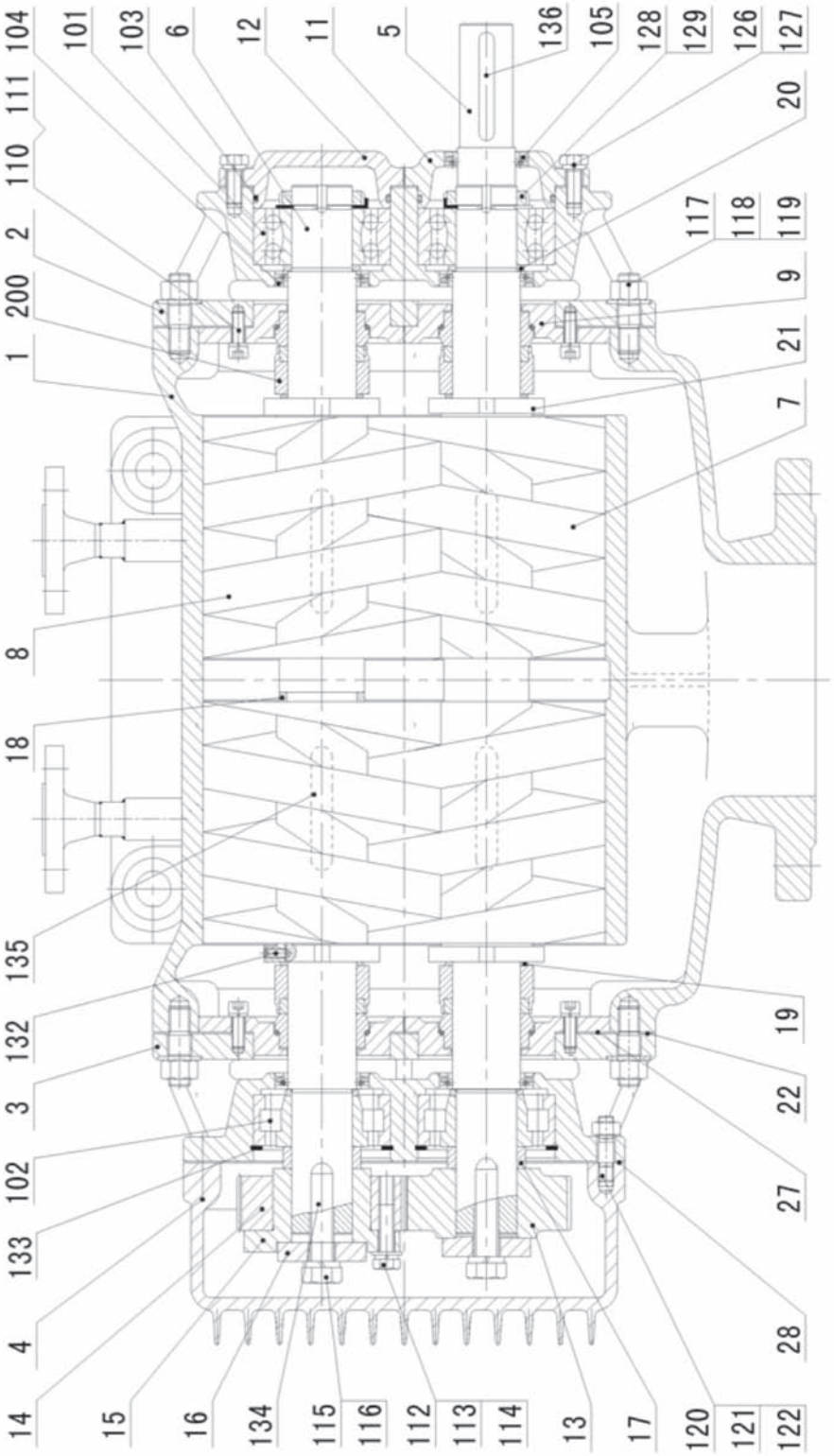

CROSS-SECTIONAL DIAGRAMS

2HM...A PUMPS

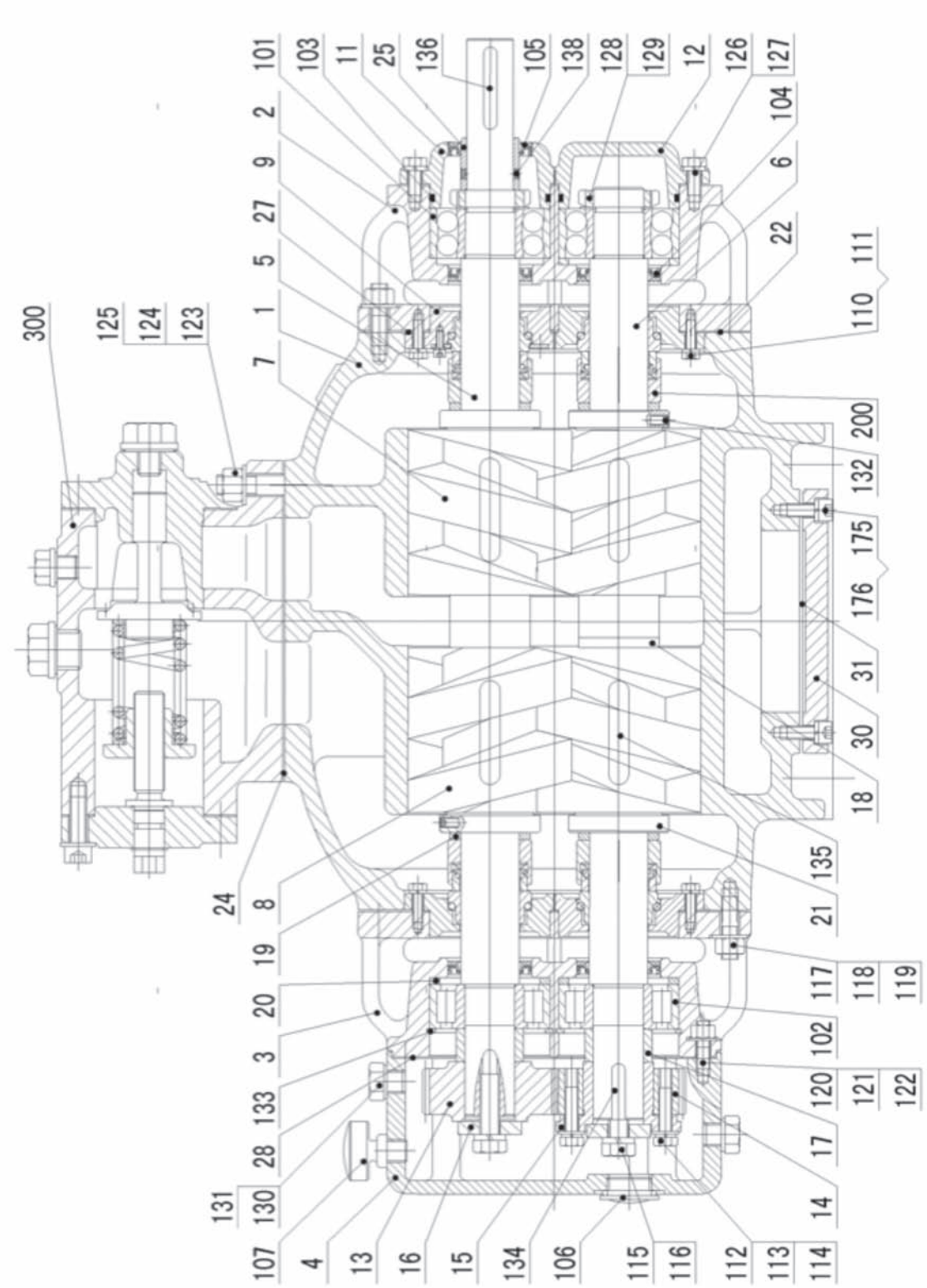

CROSS-SECTIONAL DIAGRAMS

2HMB PUMPS

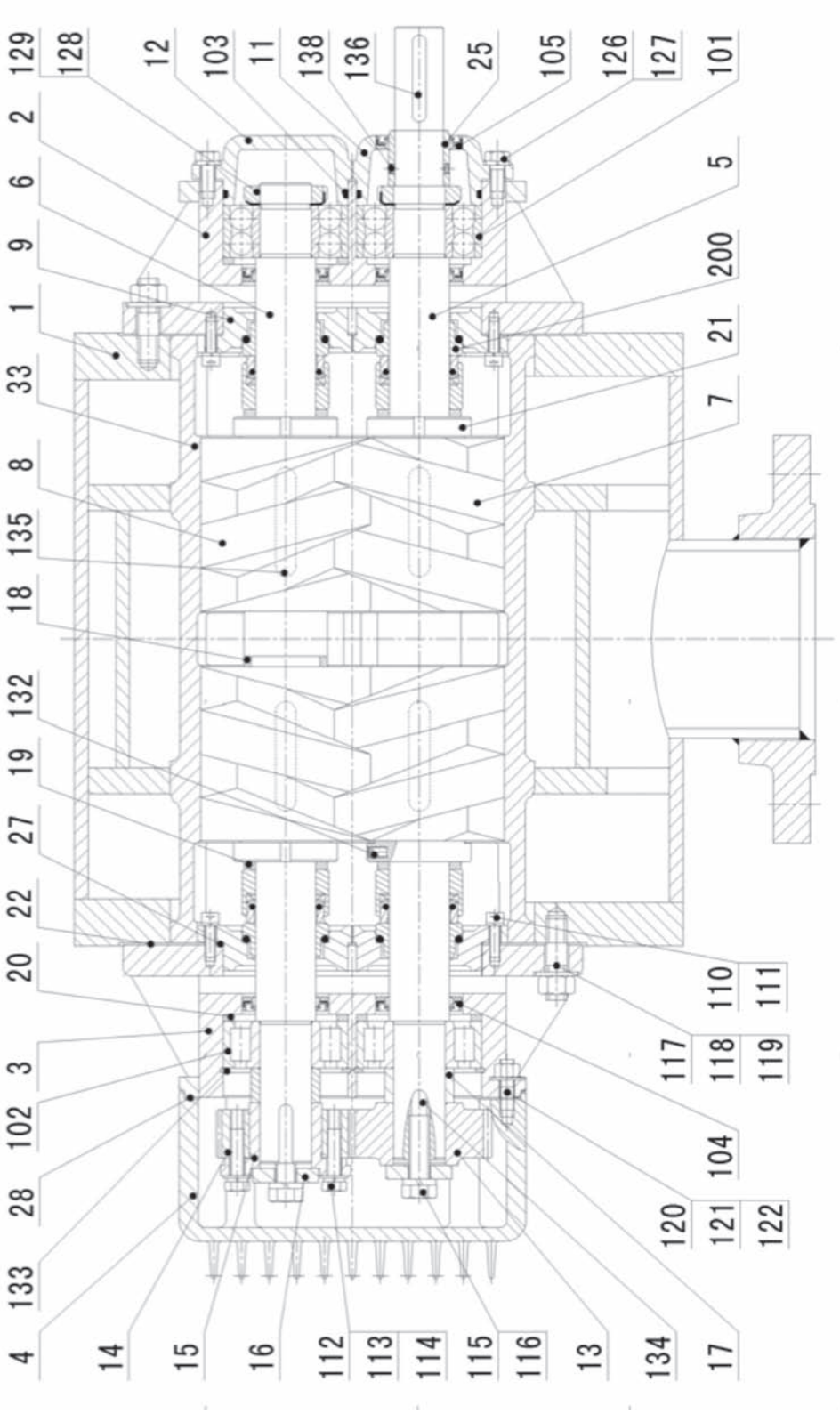

CROSS-SECTIONAL DIAGRAMS

2HM...B PUMPS

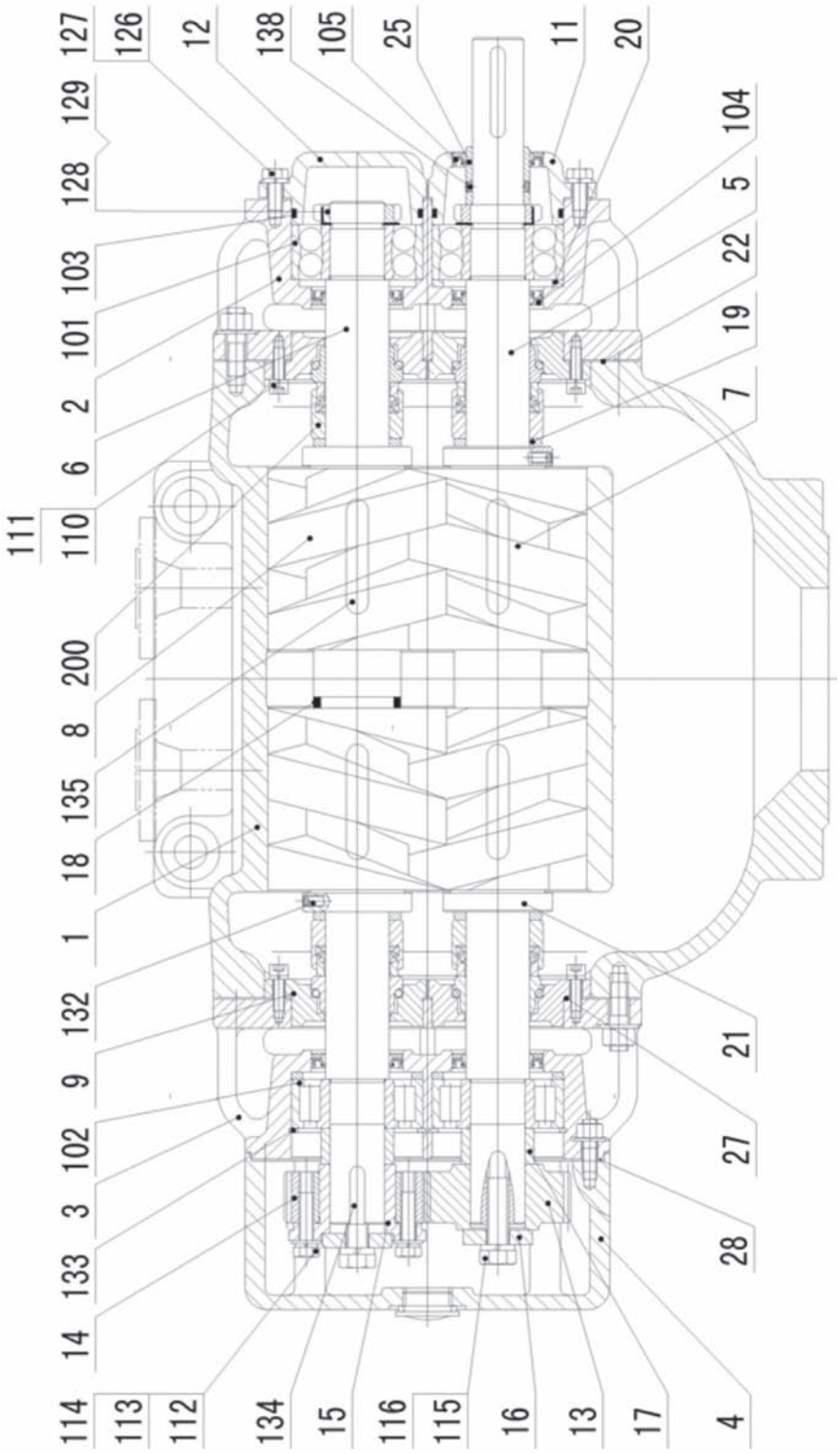

CROSS-SECTIONAL DIAGRAMS

2HMG...C PUMPS

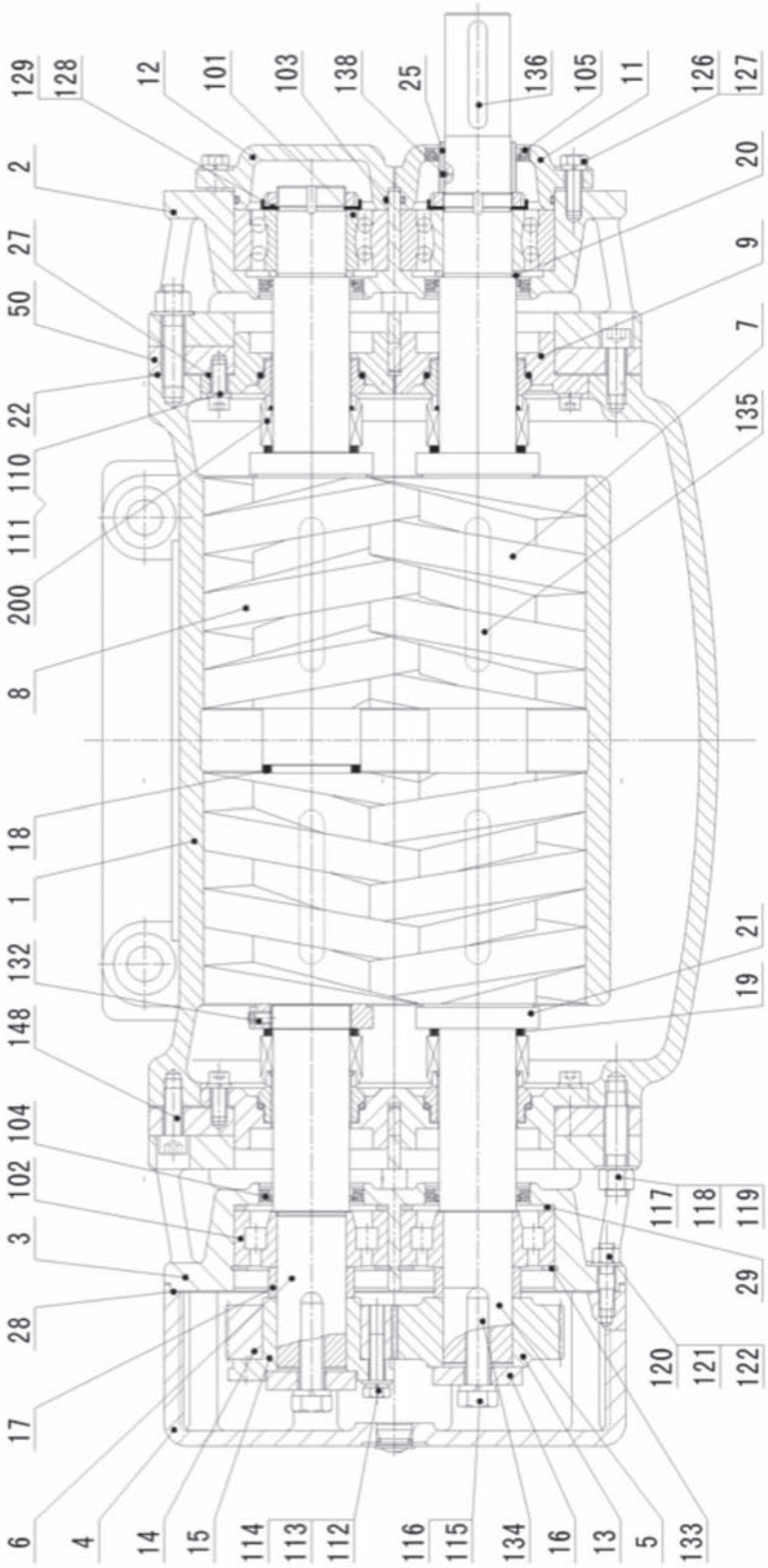

CROSS-SECTIONAL DIAGRAMS

2HM...P PUMPS

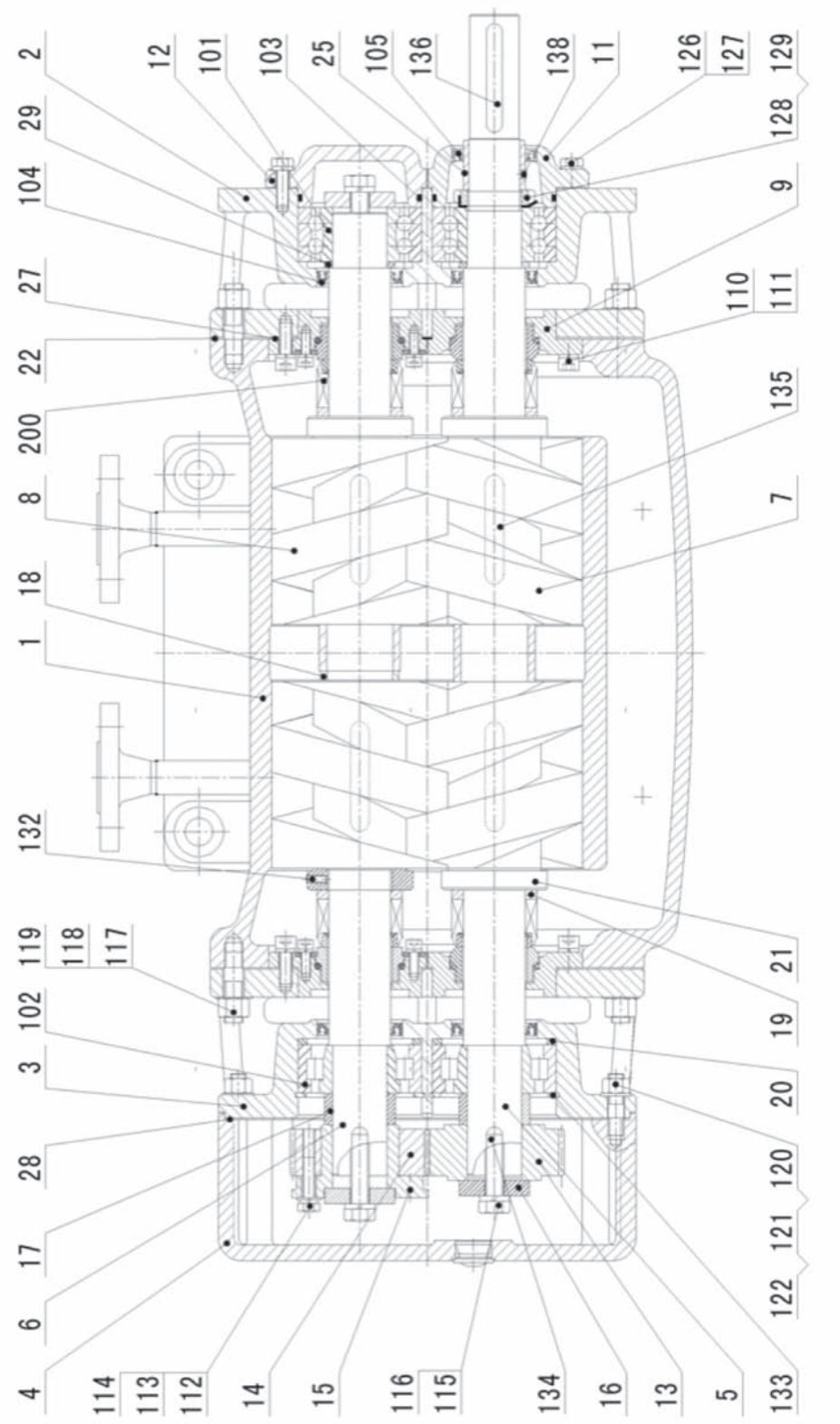

CROSS-SECTIONAL DIAGRAMS

2HRA PUMPS

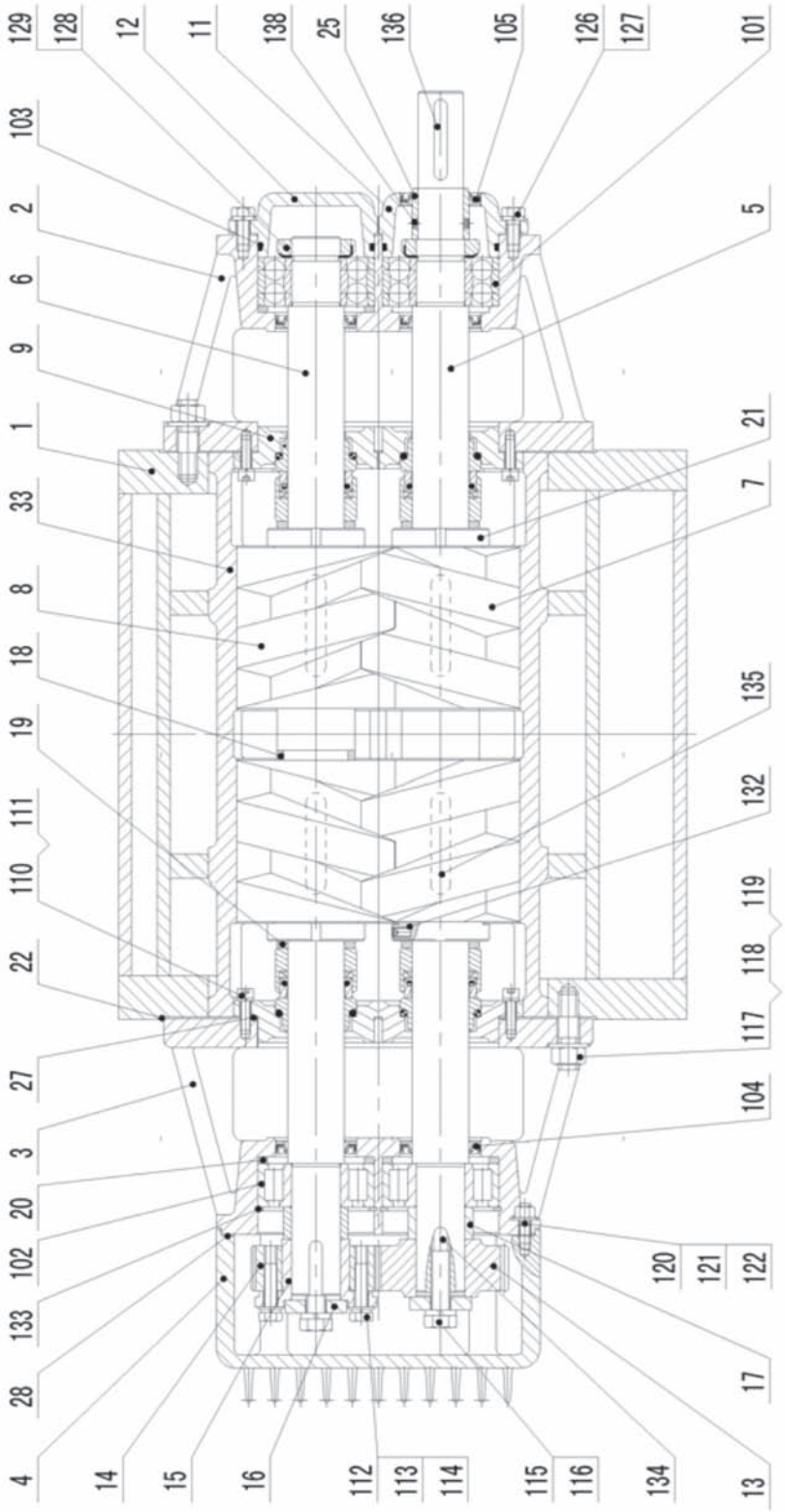

CROSS-SECTIONAL DIAGRAMS

2HRG PUMPS

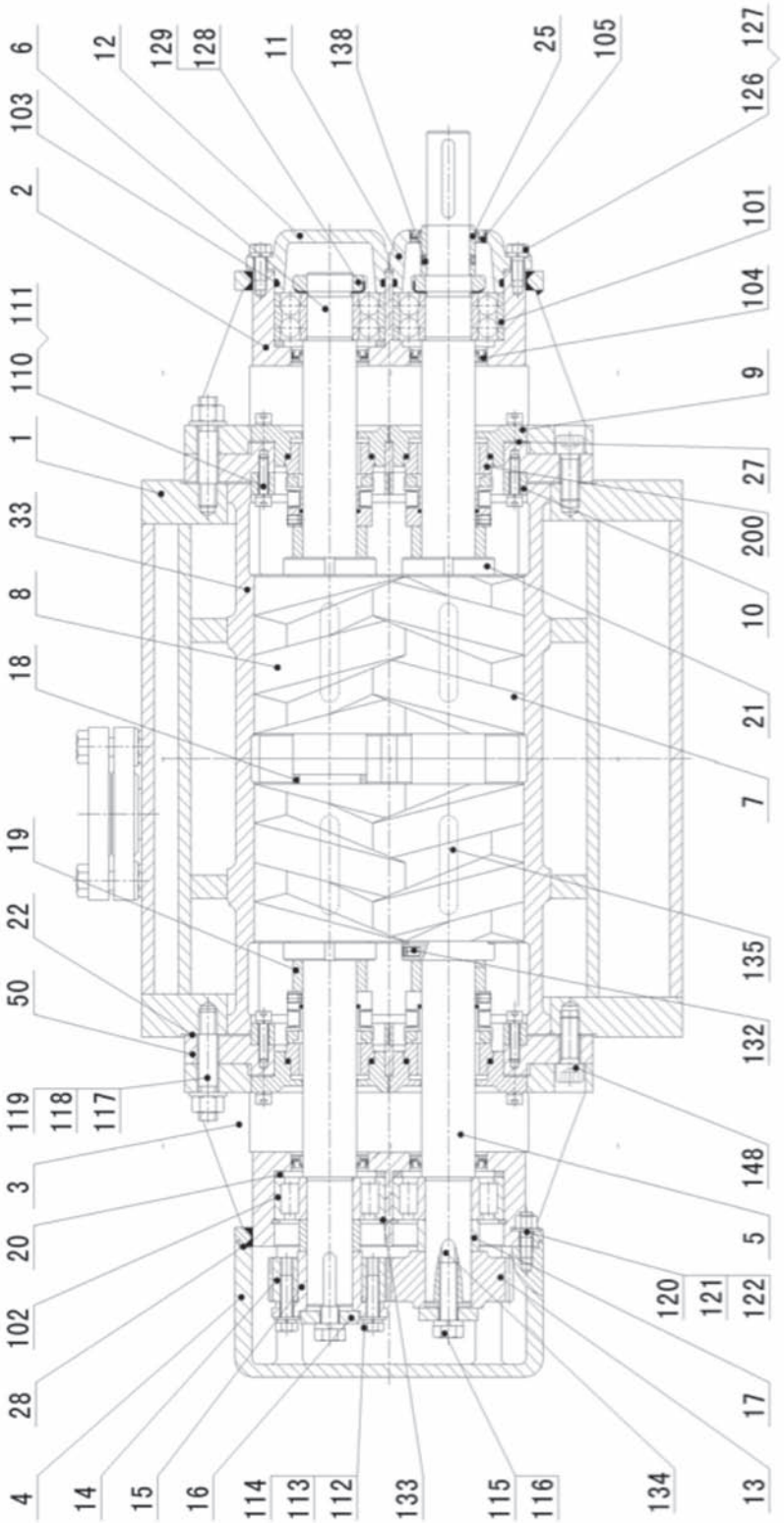

CROSS-SECTIONAL DIAGRAMS

2VM PUMPS

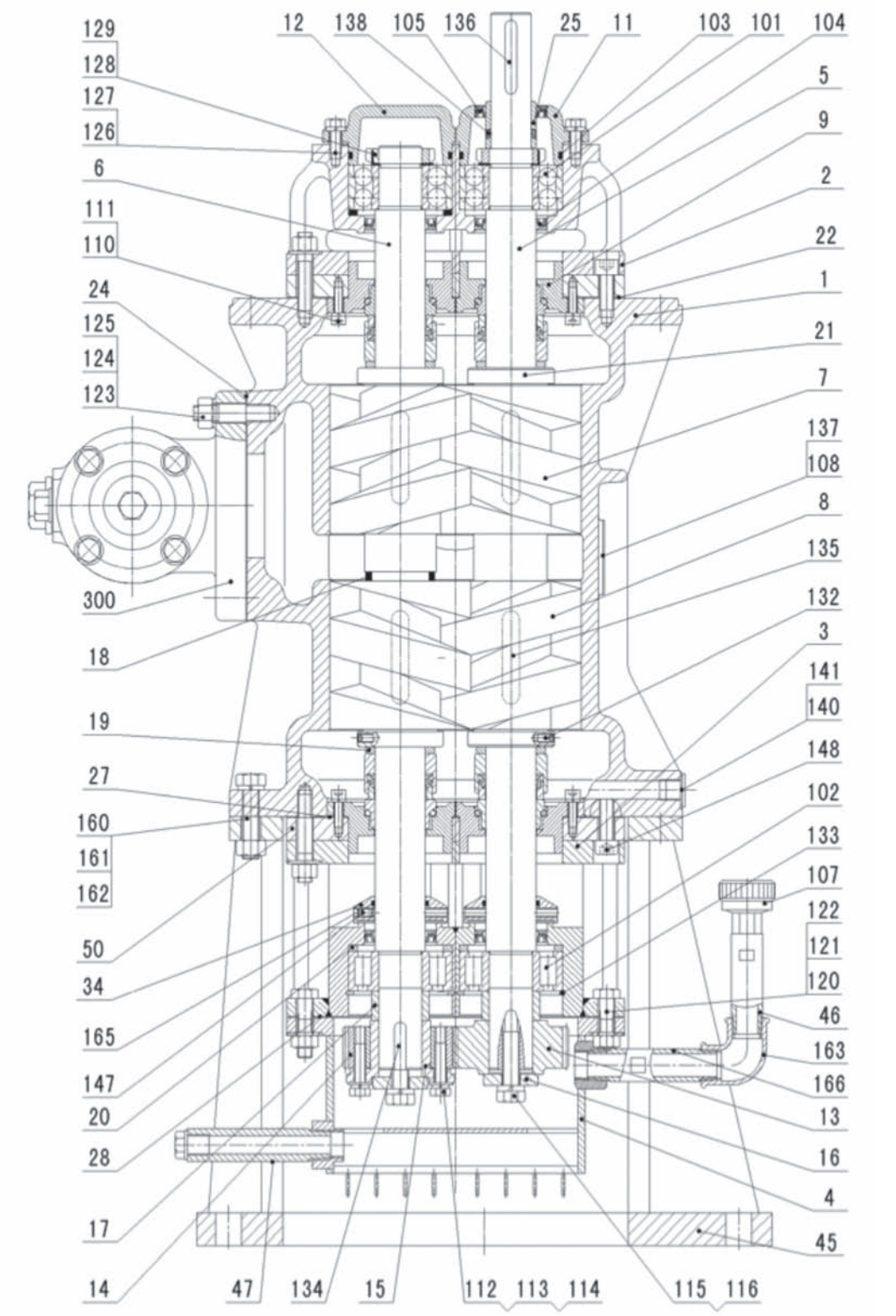

DISASSEMBLY/REASSEMBLY FOR INDEPENDENT, PRESSURE-LIMITING VALVES

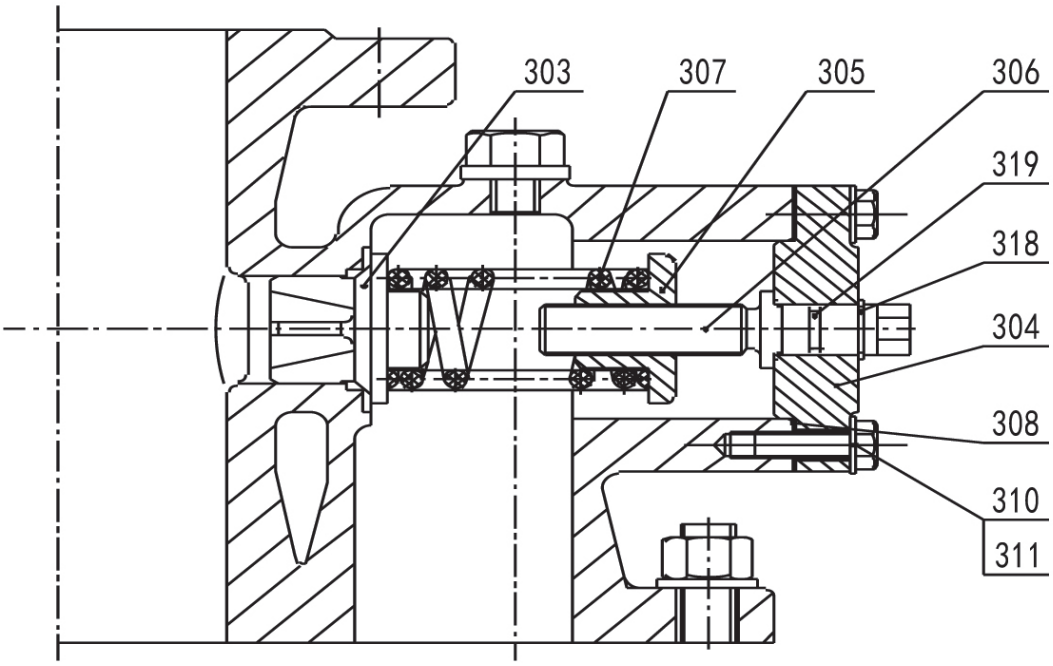

FIGURE 10

INTERNAL SPRING STRUCTURE (SIDE-IN, TOP-OUT)

NOTE: The following instructions for independent, pressure-limiting valves apply only to the following pumps: 2HE, 2HCE, 2HM, 2HC and 2HR-series.

ATTENTION: Only when the spring of the valve is relaxed can the bonnet (304) be opened. In order to keep spring tension after reassembly (to ensure the release pressure is the same) S Series suggests to record the number of revolutions completed to relax the spring.

Disassembly of Pressure-limiting Valve

Turn the adjusting spindle (306) counter-clockwise until it cannot be turned and record the number of revolutions completed.

Loosen screws (310) and spring washers (311). Remove valve bonnet (304), adjusting spindle (306) and spring holder (305) as one unit.

Remove spring (307) and valve core (303).

Remove spring holder (305) and spring clip (318). Pull adjusting spindle (306) from valve bonnet (304), and remove the O-ring (319) and gasket (308).

Reassembly of Pressure-limiting Valve

ATTENTION: If any nicks, gouges or abrasive wear is identified, the O-ring (319) and gasket (308) must be replaced.

Install O-ring (319) into the groove of adjusting spindle (306), put them into the hole of valve bonnet (304) and assemble spring clip (318) to form valve bonnet unit.

Install valve core (303), spring (307), gasket (308) and valve bonnet (304) unit. Tighten this unit to valve casing (301) with screws (310) and washers (311).

Adjust the tension of the spring (307), readjust spindle (306) clockwise by the number of revolutions completed that was previously recorded.

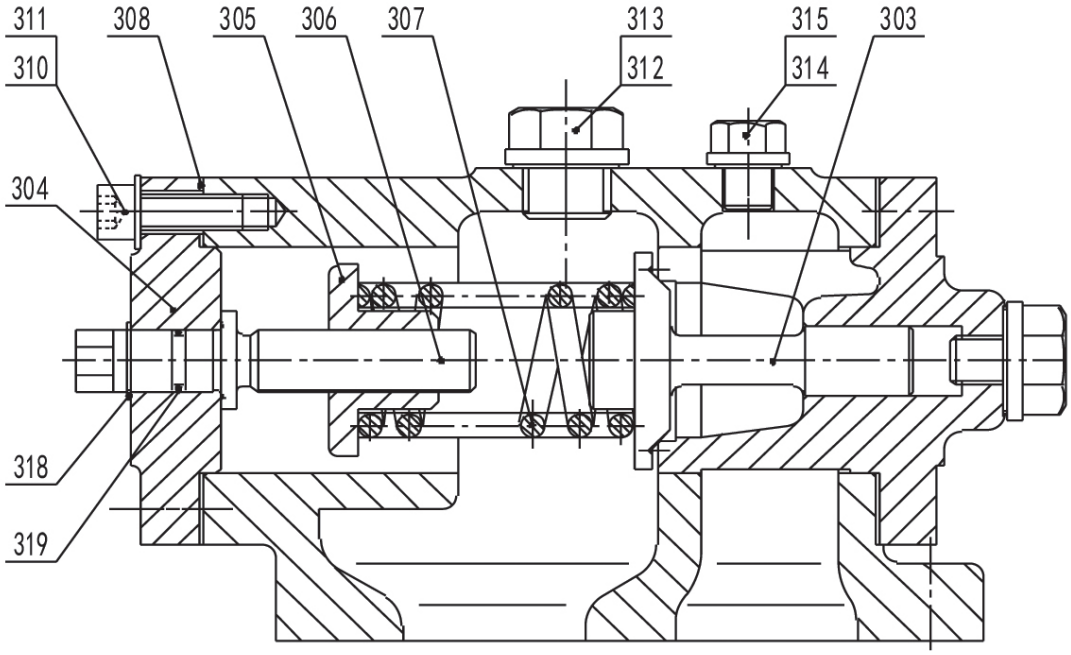

FIGURE 11

INTERNAL SPRING STRUCTURE (SIDE-IN, SIDE-OUT)

NOTE: The following instructions apply only to the following pumps: 2HE, 2HCE, 2VE, 2HM, 2HC, 2HR and 2VM-series.

ATTENTION: Only when the spring of the valve is relaxed can the bonnet (304) be opened. In order to keep spring tension after reassembly (to ensure the release pressure is the same) S Series suggests to record the number of revolutions completed to relax the spring.

Disassembly of Pressure-limiting Valve

Turn the adjusting spindle (306) counter-clockwise until it cannot be turned and record the number of revolutions completed.

Loosen screws (310) and spring washers (311). Remove valve bonnet (304), adjusting spindle (306) and spring holder (305) as one unit.

Remove spring (307) and valve core (303).

Remove spring holder (305) and spring clip (318). Pull adjusting spindle (306) from valve bonnet (304), and remove the O-ring (319) and gasket (308).

Reassembly of Pressure-limiting Valve

ATTENTION: If any nicks, gouges or abrasive wear is identified, the O-ring (319) and gasket (308) must be replaced.

Install O-ring (319) into the groove of adjusting spindle (306). Place into the hole of valve bonnet (304) and assemble spring clip (318) to form valve bonnet unit.

Install valve core (303), spring (307), gasket (308) and valve bonnet (304) unit, tighten this unit to valve (301) with screws (310) and washers (311).

Adjust the tension of the spring (307), readjust spindle (306) clockwise the number of revolutions completed that was previously recorded.

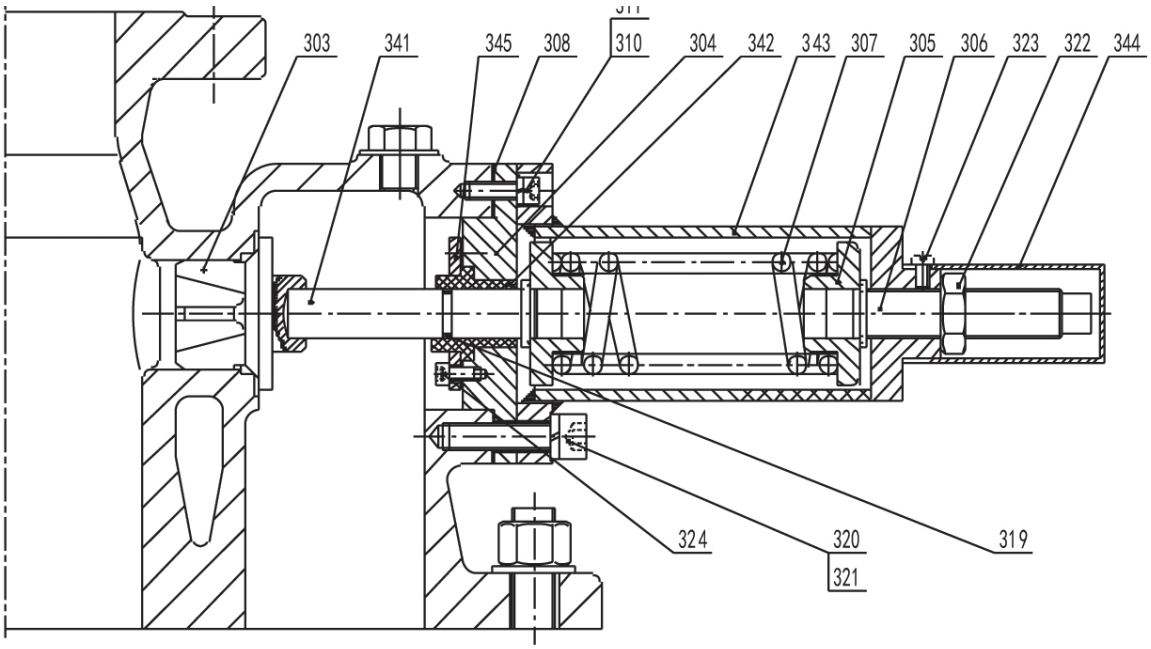

FIGURE 12

EXTERNAL SPRING STRUCTURE

NOTE: The following instructions apply only to the following pumps: 2HM, 2HC and 2HR-series.

ATTENTION: Only the when the spring of the valve is relaxed can the spindle base (343) be opened. In order to keep spring tension after reassembly (to ensure the release pressure is the same) S Series suggests to record the number of revolutions completed to relax the spring.

Disassembly of Pressure-limiting Valve

Loosen screws (323) and remove cover (344).

Remove the nut (322), turn the adjusting spindle (306) counter-clockwise until it cannot be turned and record the number of revolutions completed.

Loosen screws (320) and spring washers (321). Remove adjusting spindle base (343), adjusting spindle (306) and spring holder (305) as one unit. Remove spring holder (305) from adjusting spindle (306). Turn adjusting spindle (306) out of adjusting spindle base (343).

Remove spring (307) and the spring holder (305).

Loosen screws (310) and spring washers (311). Then, remove valve bonnet (304), push bar (341), guide sleeve (342) and locating plate (345) and O-ring (319) as one unit.

Loosen screws (324) and remove locating plate (345), guide sleeve (342), push bar (341) and O-ring (319).

Remove valve core (303).

Reassembly of Pressure-limiting Valve

ATTENTION: If any nicks, gouges or abrasive wear is identified, the O-ring (319) and gasket (308) must be replaced.

Install valve core (303).

Install guide sleeve (342) into valve bonnet (304) and tighten locating plate (345) with screw (324).

Install O-ring (319) on the push bar (341) and insert into guide sleeve (342) to form valve bonnet unit.

Install valve bonnet unit and gasket (308) into valve casing (301), then fasten with screws (310) and spring washers (311).

Install spring holder (305) on push bar (341) and place spring (307) on the holder.

Turn adjusting spindle (306) into adjusting spindle base (343) until it cannot turn.

Install spring holder (305) and spring (307) on adjusting spindle (306).

Tighten adjusting spindle base unit with screws (320) and spring washers (321) to the valve bonnet (304).

Adjust the tension of the spring (307), readjust spindle (306) clock-wise by the number of revolutions completed that was previously recorded.

Locate the spindle (306) by turning the nut (322) toward the surface of spindle base (343).

Install cover (344) and tighten with screw (323).

DISASSEMBLY/REASSEMBLY FOR BUILT-IN PUMP CASING, PRESSURE-LIMITING VALVE

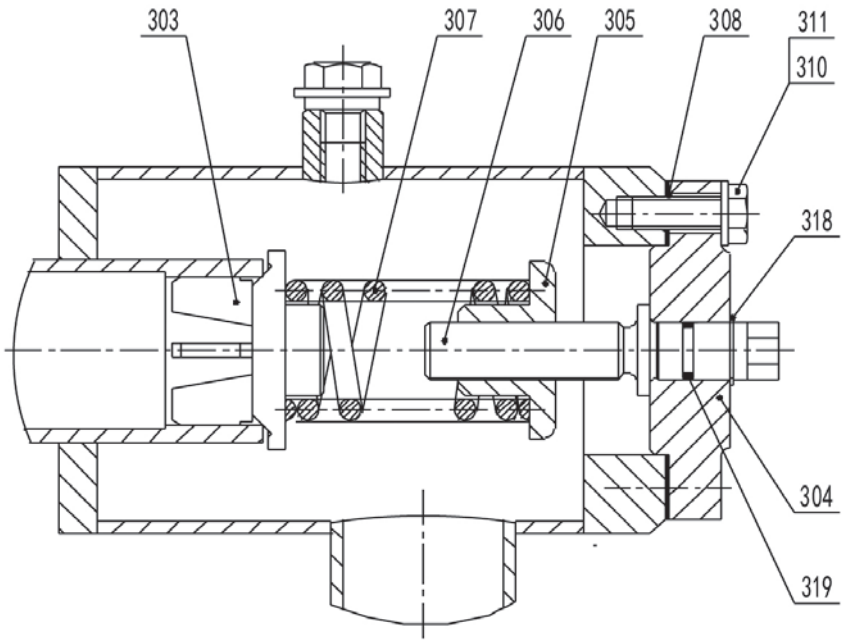

FIGURE 13

INTERNAL SPRING STRUCTURE (WELDED)

NOTE: The following instructions apply only to the following pumps: 2HE, 2HCE, 2VE, 2HM, 2HC, 2HR and 2VM-series.

ATTENTION: Only when the spring of the valve is relaxed can the bonnet (304) be opened. In order to keep spring tension after reassembly (to ensure the release pressure is the same) S Series suggests to record the number of revolutions completed to relax the spring.

Disassembly of Pressure-limiting Valve

Turn the adjusting spindle (306) counter-clockwise until it cannot be turned and record the revolutions quantity.

Loosen screws (310) and spring washers (311). Remove valve bonnet (304), adjusting spindle (306) and spring holder (305) as one unit.

Remove spring (307) and valve core (303).

Remove spring holder (305) and spring clip (318). Pull adjusting spindle (306) from valve bonnet (304), and remove the O-ring (319) and gasket (308).

Reassembly of Pressure-limiting Valve

ATTENTION: If any nicks, gouges or abrasive wear is identified, the O-ring (319) and gasket (308) must be replaced.

Install O-ring (319) into the groove of adjusting spindle (306). Place into the hole of valve bonnet (304) and assemble spring clip (318) to form valve bonnet unit.

Install valve core (303), spring (307), gasket (308) and valve bonnet (304) unit. Tighten this unit to valve casing (301) with screws (310) and washers (311).

Adjust the tension of the spring (307), readjust spindle (306) clockwise by the number of revolutions completed that was previously recorded.

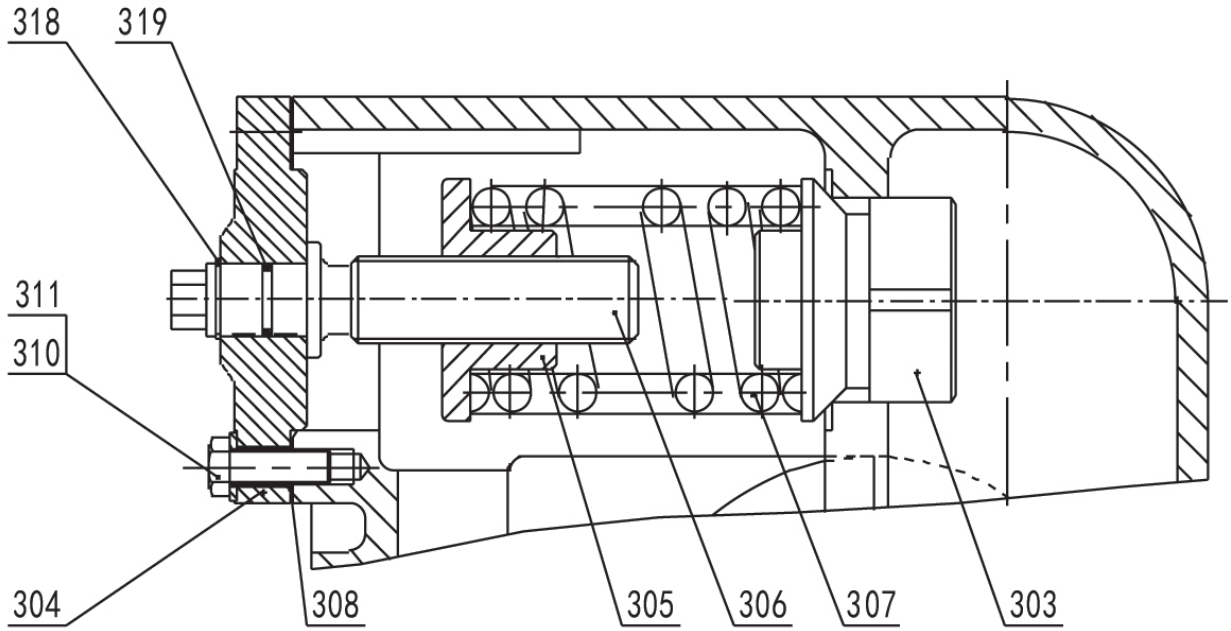

FIGURE 14

INTERNAL SPRING STRUCTURE (CASTED)

NOTE: The following instructions apply only to the following pumps: 2HCE, 2HM, 2HC and 2HR-series.

ATTENTION: Only when the spring of the valve is relaxed can the bonnet (304) be opened. In order to keep spring tension after reassembly (to ensure the release pressure is the same) S Series suggests to record the number of revolutions completed to relax the spring.

Disassembly of Pressure-limiting Valve

Turn the adjusting spindle (306) counter-clockwise until it cannot be turned and record the number of revolutions completed.

Loosen screws (310) and spring washers (311). Remove valve bonnet (304) and adjusting spindle (306) and spring holder (305) as one unit.

Remove spring (307) and valve core (303).

Remove spring holder (305) and spring clip (318). Pull adjusting spindle (306) from valve bonnet (304), and remove the O-ring (319) and gasket (308).

Reassembly of Pressure-limiting Valve

ATTENTION: If any nicks, gouges or abrasive wear is identified, the O-ring (319) and gasket (308) must be replaced.

Install O-ring (319) into the groove of adjusting spindle (306), put them into the hole of valve bonnet (304) and assemble spring clip (318) to form valve bonnet unit.

Install valve core (303), spring (307), gasket (308) and valve bonnet (304) unit. Tighten this unit to valve casing (301) with screws (310) and washers (311).

Adjust the tension of the spring (307), readjust spindle (306) clockwise by the number of revolutions completed that was previously recorded.

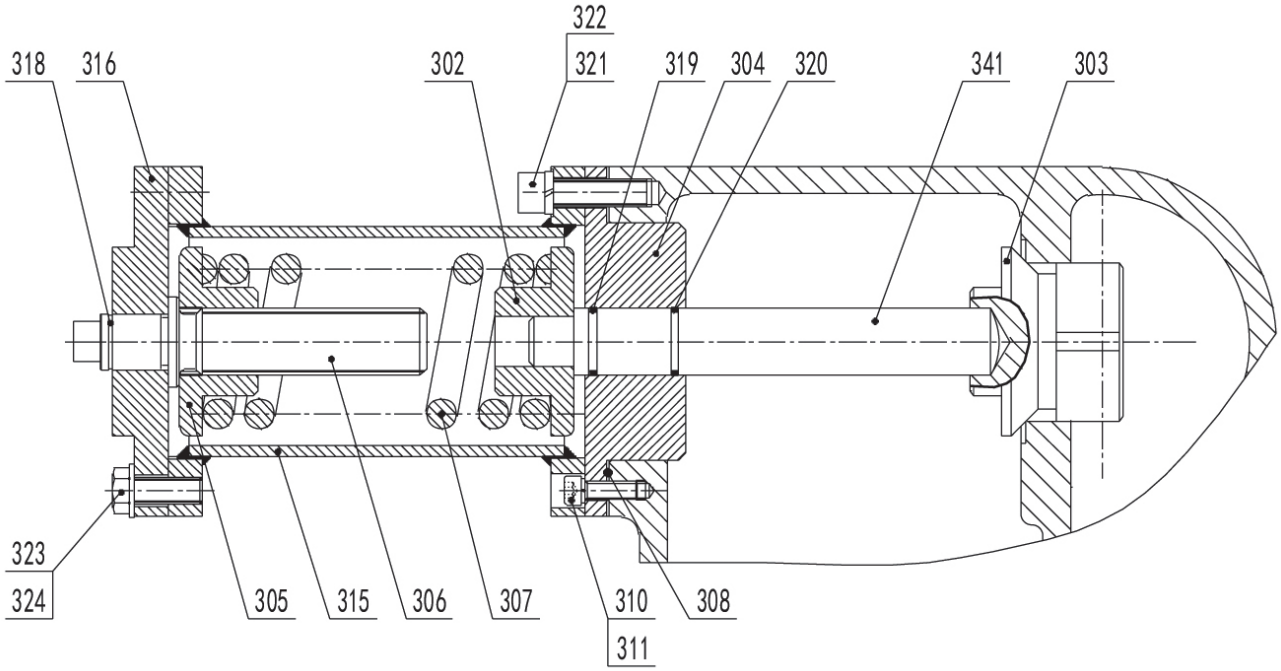

FIGURE 15

EXTERNAL SPRING STRUCTURE

NOTE: The following instructions apply only to the following pumps: 2HM, 2HC, 2HR and 2VM-series.

ATTENTION: Only when the spring of the valve is relaxed can the bonnet (304) be opened. In order to keep spring tension after reassembly (to ensure the release pressure is the same) S Series suggests to record the number of revolutions completed to relax the spring.

Disassembly of Pressure-limiting Valve

Turn the adjusting spindle (306) counter-clockwise until it cannot be turned and record the number of revolutions completed.

Loosen screws (323) and washers (324). Remove spring cover (316), adjusting spindle (306), spring holder (305) and spring clip (318) as one unit. Next, remove spring (307).

Remove spring holder (305) from adjusting spindle (306) and remove spring clip (318). Pull the adjusting spindle (306) out of spring cover (316).

Loosen screws (321) and spring washers (322). Next, remove sleeve casing (315) and remove spring holder (302).

Loosen screw (310) and spring washer (311). Remove valve bonnet (304), push bar (341), gasket (308) and O-ring (319 & 320) as one unit. Pull push bar (341) from valve bonnet (304) and remove O-ring (319 & 320) from push bar (341).

Remove valve core (303).

Reassembly of Pressure-limiting Valve

ATTENTION: If any nicks, gouges or abrasive wear is identified, O-rings (319 & 320) and gasket (308) must be replaced.

Install valve core (303).

Install O-ring (319 & 320) onto push bar (341). Insert into valve bonnet (304) to form valve bonnet unit.

Place gasket (308) between valve and valve bonnet unit and tighten with screw (310) and spring washer (311).

Install spring holder (302) onto push bar (341).

Tighten sleeve casing (315) to valve bonnet (304) with screws (321) and spring washers (322).

Turn spring holder (305) to the end of adjusting spindle (306) and insert into spring cover (316). Next, install spring clip (318) to form spring cover unit.

Place spring (307) onto spring holder (302) and tighten spring cover unit to sleeve casing (315) with screws (323) and washers (324).

Adjust the tension of the spring (307), readjust spindle (306) clockwise by the number of revolutions completed that was previously recorded.

DISASSEMBLY/REASSEMBLY FOR MECHANICAL SEALS

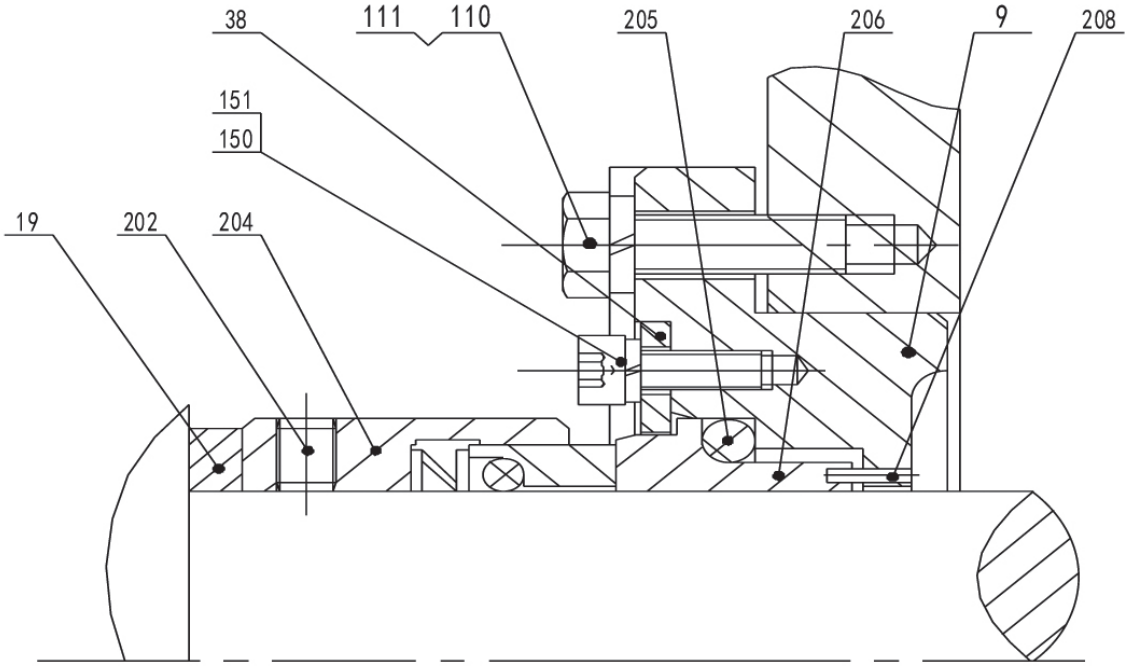

FIGURE 16

SINGLE MECHANICAL SEAL

ATTENTION: It is necessary to dismantle some parts of the pump prior to the disassembly of the mechanical seal. Mechanical seals must be disassembled with care to ensure that the sealing slide rings are not damaged. Immediately mark or label all disassembled parts in order to avoid confusion at time of reassembly. After disassembling, all parts should be carefully cleaned and checked prior to reuse; any defective parts should be replaced.

SINGLE MECHANICAL SEAL

NOTE: The following instructions apply to the following pumps: 2H, 2HE, 2HCE, 2VE, 2HM, 2HC, 2HR and 2VM-series.

Disassembly of Mechanical Seal

If screws (150) are present, loosen the screws (150) and spring washers (151) before removing pressing board (38).

Disassemble stationary seal ring (206) and O-ring (205).

Disassemble rotating ring and O-ring.

Loosen set screws (202) and remove the rotating casing (204).

Remove adjusting ring (19) and label appropriately.

Reassembly of Mechanical Seal

ATTENTION: Clean the sliding interface of the mechanical seals with silicon oil or water.

Install the rotating casing (204) of the mechanical seal onto shafts (05 & 06), adhere to the adjusting ring (19) and fasten with set screw (202). Assemble rotating ring and O-ring to the rotating casing.

Press stationary ring (206) and O-ring (205) into sealing box (09) by hand.

ATTENTION: The stationary ring must be affixed by doweling (208).

Mount the pressing board (38) (if present) on the sealing box (09) with screw (150) and spring washers (151).

Continue with appropriate pump assembly instructions.

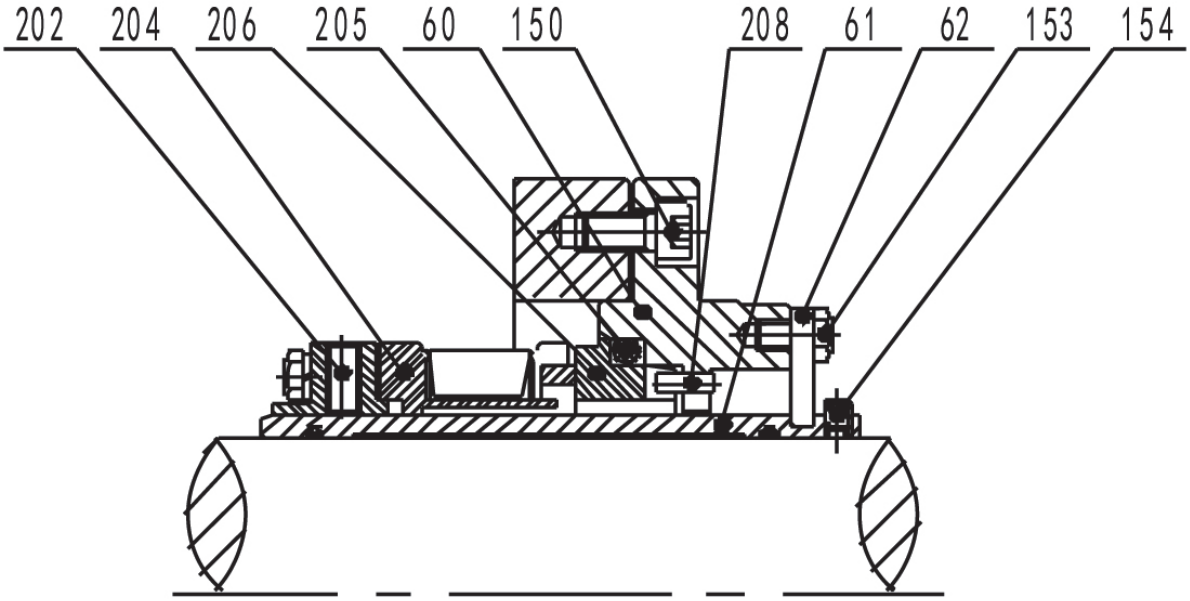

FIGURE 17

SINGLE CARTRIDGE-TYPE

NOTE: The following instructions apply only to the following pumps: 2HE, 2HCE, 2VE, 2HM, 2HC, 2HR and 2VM-series.

Disassembly of Mechanical Seal

Loosen screws (150) and set screw (154) and remove sealing box (60), shaft sleeve (61) and mechanical seal unit.

ATTENTION: Before disassembly, install pressing board (62) onto the groove of the shaft sleeve (61).

Loosen set screws (202) and disassemble rotating rings unit (204).

ATTENTION: Before further disassembly, label and measure the relative position of set screw (202) and shaft sleeve (61).

Unscrew screw (153) and disassemble shaft sleeve (61) and pressing board (62).

Disassemble the stationary seal ring (206) and O-ring (205).

Reassembly of Mechanical Seal

ATTENTION: Clean the sliding interface of the mechanical seals with silicon oil or water.

Press stationary seal ring (206) and O-ring (205) into sealing box (60) by hand.

ATTENTION: The stationary seal ring must be affixed by doweling (208).

Mount rotating ring units of mechanical seal onto shaft sleeve (61) and fasten with set screw (202) as originally marked in disassembly section.

Fasten cartridge-type singe mechanical seal with screw (150); fasten set screw (154).

Mount pressing board (62) onto sealing box (60) with screw (153) and fasten shaft sleeve (61).

Loosen screw (153), move pressing board (62) out of the groove in shaft sleeve (61), then fasten screw (153).

Continue with appropriate pump assembly instructions.

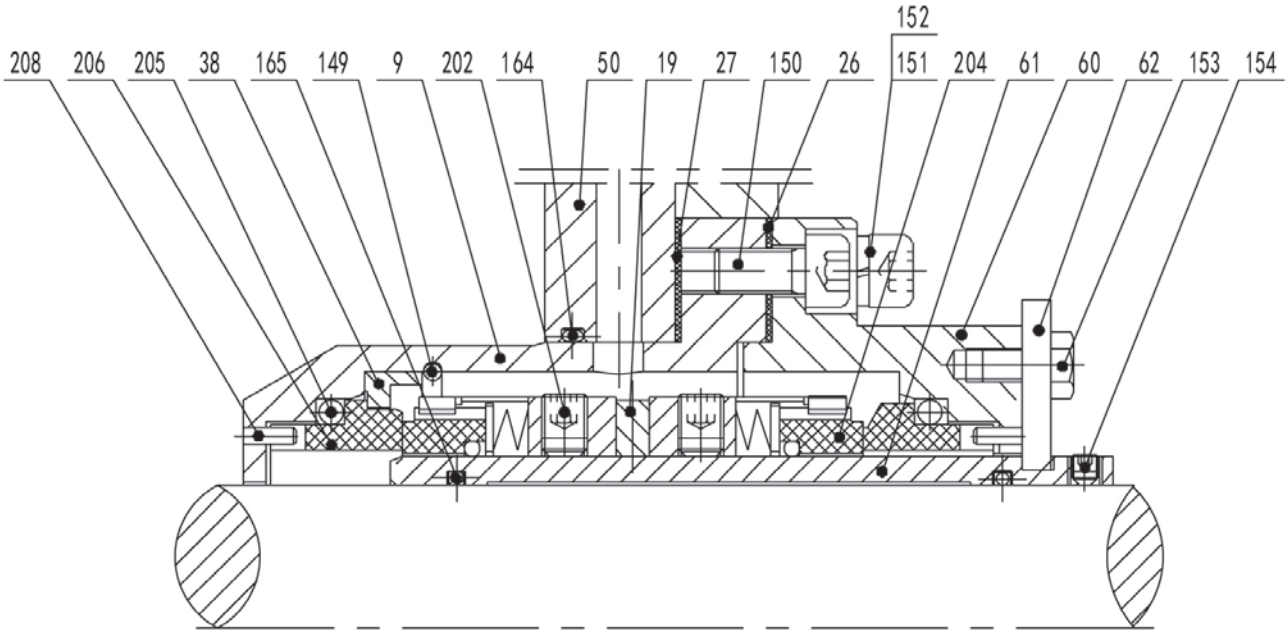

FIGURE 18

DOUBLE CARTRIDGE-TYPE

NOTE: The following instructions apply only to the following pumps: 2HM, and 2HR-series.

ATTENTION: These instructions will only be applicable to 2HM and 2HR series Pumps.

Disassembly of Mechanical Seal

Disassemble screw (151) and spring washer (152) then loosen set screw (154). Next, remove the cartridge-type mechanical seal. Remove gasket (27) and O-ring (164).

ATTENTION: Before disassembly, install pressing board (62) onto the groove of shaft sleeve (61).

Unscrew (150) and disassemble sealing box (09) and sealing box (60) unit. Remove gasket (26).

Disassemble C-clip (149), pressing board (38), stationary ring (206) and O-ring (205).

Loosen screw (153) and disassemble pressing board (62). Remove shaft sleeve (61) and rotating ring (204) unit; remove O-ring (165).

Loosen set screw (202) and disassemble rotating ring (204) unit and adjusting ring (19). Label and measure the relative position of set screw (202). Label these parts to avoid confusion during reassembly.

Disassemble the stationary seal rings (206) and O-ring (205).

Reassembly of Mechanical Seal

ATTENTION: Clean the sliding interface of the mechanical seals with silicon oil or water.

Press stationary ring (206) and O-ring (205) into sealing box (60) by hand.

ATTENTION: The stationary ring must be affixed by doweling (208).

Install rotating ring (204) unit and adjusting ring (19) on shaft sleeve (61), fasten with set screw (202) at the original position (marked during disassembly) and install O-ring (165).

Place the pressing board (62) into the groove of the sleeve (61) and tighten to sealing box (60) with bolt (153).

Insert stationary ring (206) and O-ring (205) into sealing box (09) by hand. Next, install pressing board (38) and C-clip (149).

ATTENTION: The stationary ring must be affixed by doweling (208).

Place gasket (26) between sealing box (09) unit and sealing box (60) unit and tighten with screw (150).

Install O-ring (164) in the groove on the space plate (50), install cartridge-type mechanical seal and gasket (27) on space plate (50); tighten with screw (151) and spring lock washer (152).

Fasten set screw (154) to the shaft.

Loosen bolt (153), remove pressing board (62) out of the groove in shaft sleeve (61), then fasten bolt (153).

Continue with appropriate pump assembly instructions.

Where Innovation Flows

Дистрибутор:
България, София 1528, ул."Поручик Неделчо Бончев" 3, ет.5
+359 2 973 27 67, +359 2 973 2370; office_bg@opwmarket.com